ProMinent®

Metering pumps, components and metering systems



2016

Issued by:

ProMinent GmbH
Im Schuhmachergewann 5-11
69123 Heidelberg
Germany
Phone +49 6221 842–0
info@prominent.com
www.prominent.com

Technical changes reserved.

All previous catalogues and price lists are superseded with the release of this product catalogue.
You can view our general terms and conditions on our homepage.

Heidelberg, January 2016

Product Catalogue Volume 1

Metering Pumps, Components and Metering Systems



Metering technology for professionals

The heart of metering technology is quite clearly the pump.

With its optimum performance range and functionality adapted to the feed chemical, it is responsible for smooth-running metering processes.

Chapter 1 focuses on metering pumps that perform all possible metering tasks, ranging from micro-metering pumps to pumps delivering up to 75 l/h at a maximum back pressure of 60 bar.

Chapter 2 goes on to present durable and easy-to-operate transfer and peristaltic pumps for pure pump capacities, as well as the matching components, like sturdy storage tanks and collecting pans.

Refer to **Chapter 3** for fully ready mounted metering systems. Whether standard or made-to-measure, thanks to their perfect interaction, the precisely coordinated components ensure a safe and immediately ready-to-use complete solution.

We're there for you!

The selection of a product depends on a number of different factors.

Our team will be happy to be of assistance should you have any questions about our metering technology. Give us a call! We look forward to hearing from you.

Monday to Friday 8:00 - 16:30

ProMinent Sales
0049 6221 842-0
info@prominent.com

Technical Consulting
0049 6221 842-1850
service@prominent.com

Pump Guide

You can also find information online. Try out our ProMinent Selection Guide on our website. Just enter the required pump capacity and back pressure – and the Pump Guide will present you with a list of suitable metering pumps. It's the quickest and easiest way to track down the right pump for your needs.

www.pump-guide.com

Note:	We can also support you by phone in selecting the right products and, in many cases, optimising entire applications. For more complex requirements, our consultants will hand the task over to a field sales colleague, who will then clarify your requirements in person on site.

After-sales Service

Our service technicians are on hand to help you. Regardless of whether you need assistance with initial installation or with maintenance and repair – we're happy to help!

0049 6221 842-1850
service@prominent.com

Note:	Local to you around the world.Find contact details for our branch offices around the globe at: www.prominent.com/en/locations

Step by Step to the Right Product

Metering tasks come in all shapes and sizes! Provide us with your data - we'll deliver the optimum solution!

The following data sheet will help in solving your metering problem. Please enter your requirements and conditions and return it to info-de@prominent.com . Our Service Centre will use your data to reach the optimum result - the optimum metering pump and matching accessories for your application.

Required Data for Designing Metering Pumps and Accessories

Min./max. required feed rate	l/h _____
Available power supply	_____ V, _____ Hz
Min./max. operating temperature	°C _____
Properties of process chemical	_____
Name, concentration %	_____
Solids content %	_____
Dynamic viscosity mPa (= cP)	_____
Vapour pressure at operating temperature	bar _____
Remarks, e.g. abrasive,	_____
gaseous, flammable,	_____
corrosive towards	_____

Suction conditions:

Min./max. suction lift	m _____
Min./max. positive suction head	m _____
Pressure in chemical tank	bar _____
Suction line length	m _____
Suction line diameter	mm _____

Discharge conditions:

Min./max. back pressure	bar _____
Min./max. discharge head	m _____
Min./max. negative discharge head	m _____
Discharge line length	m _____
Discharge line diameter	mm _____
Number of valves and fittings in suction and discharge line	_____

Data required for proportional dosing:

Water flow Q min./max.	m^3/h _____
Required final concentration	g/m^3, ppm _____

Example:

A required dose in mg/l = g/m^3 = ppm

(Water flow Q max. 50 m^3/h)

Pulse spacing (flow volume per pulse) of water meter 5 l.

Process fluid = sodium hypochlorite solution Na OCl with 12 % chlorine (by weight) = 120 g/kg = 150 g/l = 150 mg/ml

Selected dosing pump GALa 1005 NPB2 with 0.41 ml/per stroke volume, at max. 10800 strokes/h.

Variables: pump type, pulse spacing and concentration. The stroke rate (max. throughput l/h: pulse spacing l/pulse = 50,000 l/h : 5 l/pulse = 10000 pulses/h) must not exceed the max. stroke frequency (10800 strokes/h) of the dosing pump.

$$\text{Feed quantity} = \frac{\text{water throughput Q max. (l/h) x stroke volume (l)}}{\text{pulse spacing (l)}} = \frac{\text{50,000 l x 0.00041 l}}{\text{h x 5 l}} = 4.1 \text{ l/h}$$

$$\text{Final dose} = \frac{\text{concentration (mg/ml) x stroke volume (l)}}{\text{pulse spacing (l)}} = \frac{\text{150 mg x 0.41 ml}}{\text{ml x 5 l}} = 12.3 \text{ mg/l}$$

$= 12.3\ g/m^3$

$= 12.3$ ppm chlorine Cl_2

pk_0_002

We'd be pleased to go through these points with you by phone. We're there to help!

Free Choice with the Identity Code

Use the identity code to determine the properties and features of your low-pressure metering pump. Simply select, enter the code in the bottom row and you've configured your product!

You've opted for a pump product range. It's now up to you to configure the pump exactly to meet your individual needs.

First determine the **pump type (1)**. This is based on the pump capacity you require and the back pressure present. Enter the result at the very bottom, in the grey row of the identity code.

The medium to be metered is crucial when it comes to the **material of the dosing head (2)** and the **seals (3)**. Once again enter the selected code in the bottom row.

You can now select the features and properties of your product with a few restrictions.

Work through column by column, generating the identity code for your own individual metering pump.

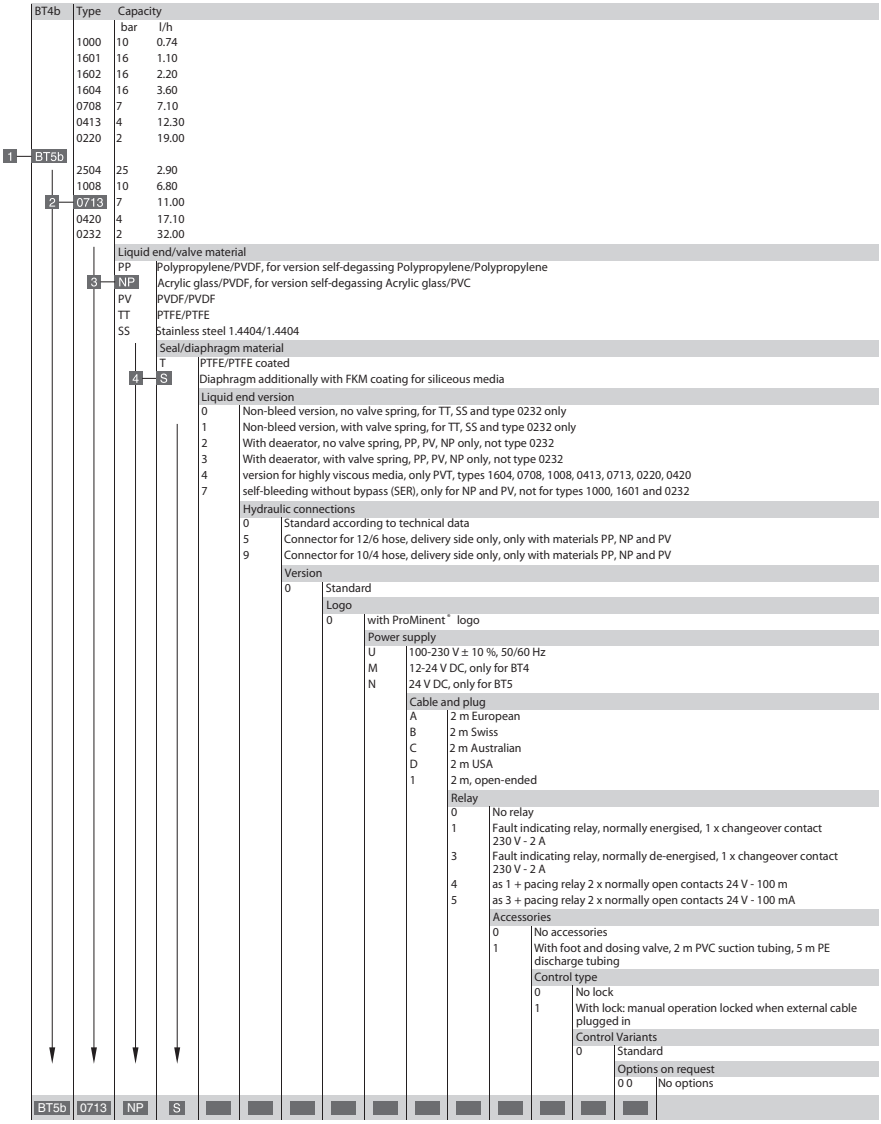

BT4b	Type	Capacity bar	Capacity l/h
	1000	10	0.74
	1601	16	1.10
	1602	16	2.20
	1604	16	3.60
	0708	7	7.10
	0413	4	12.30
	0220	2	19.00
1 BT5b			
	2504	25	2.90
	1008	10	6.80
2	0713	7	11.00
	0420	4	17.10
	0232	2	32.00

Liquid end/valve material

PP	Polypropylene/PVDF, for version self-degassing Polypropylene/Polypropylene
3 NP	Acrylic glass/PVDF, for version self-degassing Acrylic glass/PVC
PV	PVDF/PVDF
TT	PTFE/PTFE
SS	Stainless steel 1.4404/1.4404

Seal/diaphragm material

T	PTFE/PTFE coated
4 S	Diaphragm additionally with FKM coating for siliceous media

Liquid end version

0	Non-bleed version, no valve spring, for TT, SS and type 0232 only
1	Non-bleed version, with valve spring, for TT, SS and type 0232 only
2	With deaerator, no valve spring, PP, PV, NP only, not type 0232
3	With deaerator, with valve spring, PP, PV, NP only, not type 0232
4	version for highly viscous media, only PVT, types 1604, 0708, 1008, 0413, 0713, 0220, 0420
7	self-bleeding without bypass (SER), only for NP and PV, not for types 1000, 1601 and 0232

Hydraulic connections

0	Standard according to technical data
5	Connector for 12/6 hose, delivery side only, only with materials PP, NP and PV
9	Connector for 10/4 hose, delivery side only, only with materials PP, NP and PV

Version

0	Standard

Logo

0	with ProMinent® logo

Power supply

U	100-230 V ± 10 %, 50/60 Hz
M	12-24 V DC, only for BT4
N	24 V DC, only for BT5

Cable and plug

A	2 m European
B	2 m Swiss
C	2 m Australian
D	2 m USA
1	2 m, open-ended

Relay

0	No relay
1	Fault indicating relay, normally energised, 1 x changeover contact 230 V - 2 A
3	Fault indicating relay, normally de-energised, 1 x changeover contact 230 V - 2 A
4	as 1 + pacing relay 2 x normally open contacts 24 V - 100 m
5	as 3 + pacing relay 2 x normally open contacts 24 V - 100 mA

Accessories

0	No accessories
1	With foot and dosing valve, 2 m PVC suction tubing, 5 m PE discharge tubing

Control type

0	No lock
1	With lock: manual operation locked when external cable plugged in

Control Variants

0	Standard

Options on request

0 0	No options

BT5b	0713	NP	S												

We will be happy to advise you on your metering application.

Give us a call should you still have any questions!

ProMinent Germany Sales

0049 6221 842-0
info-de@prominent.com

Technical Consulting

0049 6221 842-1850
service@prominent.com

Metering Pumps also Need Accessories

Examples of metering tasks illustrate which components and accessories can be used for different metering processes.

A pump alone is often simply not enough. A metering process requires further **components and accessories**. ProMinent provides all the products you need to guarantee **optimum process flows** for the metering of liquid media. Expertise and advice are, of course, included!

1 Metering pump
2 DFMa flow meter with single stroke monitor and feedback to the metering pump
3 Suction assembly with level switch
4 Chemical tank
5 Drain cock
6 Stirrer
7 Timer for stirrer
8 Signal horn
9 Display lamp
10 Manometer for precise adjustment of the back pressure valve
11 Back pressure valve

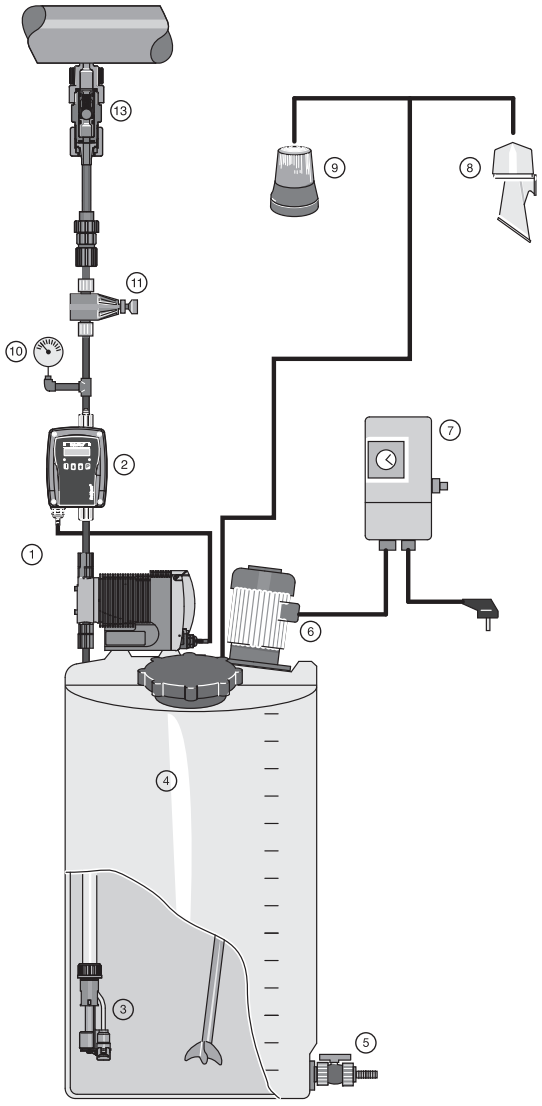

AP_0004_SW3

Metering Pumps also Need Accessories

1 Metering pump
3 Suction assembly with level switch
4 Chemical tank
5 Drain cock
6 Stirrer
7 Timer for stirrer
12 Multifunctional valve
13 Injection valve

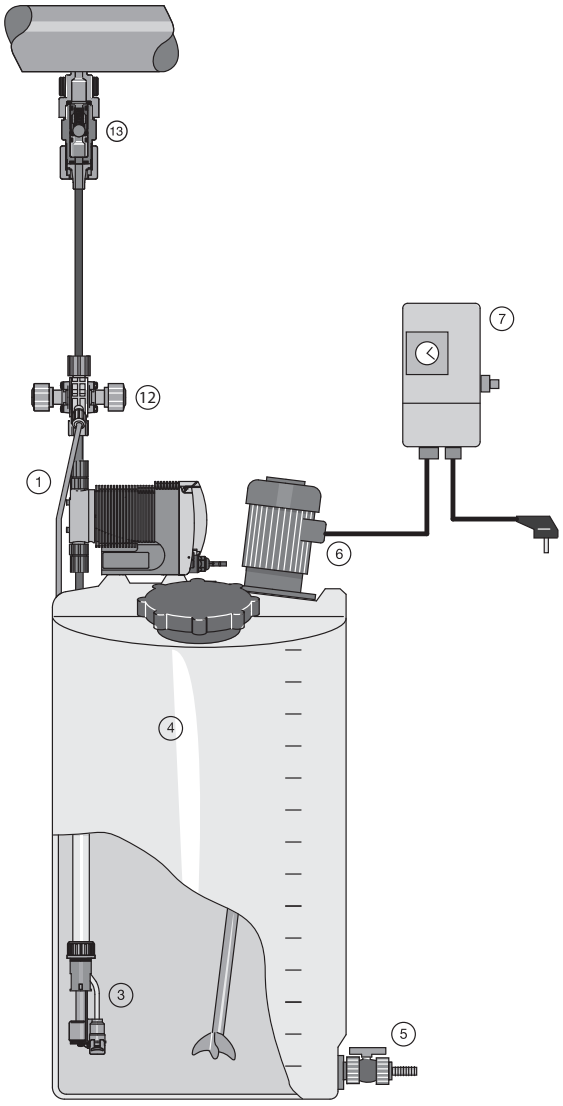

AP_0005_SW3

New Products Metering Pumps, Components and Metering Systems

NEW



New feature for successful all-rounder

In 2016 ProMinent is extending the function range of the Beta® b without restricting its tried and tested characteristics. The pump will then optionally be available with a 0/4…20 mA input. The standard signal commonly used in industry will allow the pump's performance to be controlled from a remote control room. Adjusting between 0/4…20 mA is incredibly simple: the Beta® b integrates the corresponding positions on the "Pulse Control Switch". As the 0/4…20 mA signal is unaffected by electromagnetic interference, the Beta® b product range can also be safely operated using long control lines. A potential control line failure is recognised as a fault and can be quickly reported to the control room. Another pioneering feature is the very easy way in which the Beta® b can be integrated in centrally controlled systems. This new function will continue to make the Beta® b the product range of choice for water treatment and chemical metering.

For more information see page → 1-7



Solenoid driven metering pump gamma/ X now with Bluetooth interface

- Optional Bluetooth interface for convenient adjustment and configuration of the operating parameters
- Virtually wear-free solenoid drive, overload-proof and economical
- Suitable for continuous micro-metering from 1 ml/h thanks to the regulated solenoid drive
- Simple adjustment of the capacity directly in l/h
- Direct input of the required final concentration in volume-proportional metering tasks
- Detection of hydraulic malfunctions or blocked discharge lines ensures smooth process
- Integrated pressure measurement and display for greater safety during commissioning and in the process
- Adaptation to existing signal transducers by external control via potential-free contacts with pulse step-up and step-down
- External control via 0/4-20 mA standard signal with adjustable assignment of signal value to stroke rate
- Integrated 1-month timer for timed metering tasks
- Guaranteed metering by means of automatic bleeding
- Connection to process control systems via bus interfaces, such as Profibus, Profinet, CAN bus and others on request

For more information see page → 1-13

New Products Metering Pumps, Components and Metering Systems



Rotary Lobe Pumps

Capacity range 25–100 m^3/h, 10–4 bar

The rotary lobe pump is robust and surprisingly powerful given its compact dimensions: depending on the model it can pump up to 100 m^3/h viscose media and media containing solids, even containing larger particles of solids. It can be used with ease as a self-priming pump with reversible pumping direction. And naturally it is absolutely safe to operate as an intermediate chamber reliably separating the pumped medium from the gear oil.

The carefully selected materials, high-grade workmanship and maintenance-friendly construction make the rotary lobe pump into a low-wear endurance pump. A three-phase motor drives the two rotary pistons via a precision gear perfectly synchronised and thus also quietly. Corresponding drive versions enable the pump to be connected to bus systems and thus integrated into modern production environments.

- Pump complete with drive motor, reduction gear system, clutch and base plate
- Housing material AISI-316 or AISI 420, rotary piston and shaft seals made of NBR, EPDM or FKM
- Constant i.e. non-pulsing feed rates
- Valveless construction enables reversed pump direction
- Different versions of power end/drive via three-phase motor (On/Off mode, adjustable motor with integrated frequency converter or external fan)
- Connection to bus system is possible (integrated frequency converter needed)
- Hydraulic connection as standard by means of DIN flange (DN 50, 65, 80, 100, 125), other connectors available
- Simple replacement of wear discs thanks to maintenance-friendly construction

For more information see page → 2-22

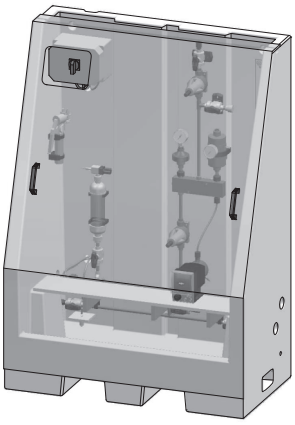

Metering System DULCODOS® universal

Pump volume depending on the selected pump 1 ml/h–75 l/h, back pressure 10-2 bar

Metering is dependent on the metering pump. Components, such as pipes, relief valves and electrics – indispensable, but scarcely variable – ensure the reliable operation of the system. That is why we have pre-configured the new metering system DULCODOS® universal with these standards. The benefits for you: low costs, fast delivery, simple commissioning.

Naturally you have a choice here as well: Should it be the solenoid driven metering pump Beta® 4 or 5, delta® or gamma/ X? Should the pipes and seals be made of PP/FKM or PVC/EPDM? And do you need one or two points of injection with one or two pumps?

The novel valve block gives every metering system a clearly arranged structure. Every system is equipped with two relief valves, a collecting pan with leakage sensor and a calibration tank for controlled metering for complete operational safety.

- ProMinent solenoid driven metering pumps Beta® 4/5, delta® or gamma/ X
- Dimensions: 1,700 x 1,200 x 635 mm (H x W x D)
- Material combinations: PP/FKM or PVC/EPDM (note compatibility with the feed chemical)
- Relief valves to protect the pipework
- Manometer
- Collecting pan with leakage sensor
- Flushing connectors
- Terminal box with master switch
- Assembly frame available in 6 standard colours

For more information see page → 3-10

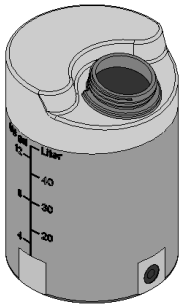

Dosing Tanks

Our PE dosing tanks are now also available with a useful capacity of **1,500 litres**. The blue, black. yellow, red and neutral storage tanks are manufactured in the ProMinent quality you have come to expect.

Diameter: 1,150 mm, Height: 1,735 mm, Weight: approx. 80 kg.

Dosing tank with flat mounting surface

- "Natural/transparent PE dosing tank" design without sintered threaded socket
- Level mounting surface for the installation of metering pumps on the storage tank
- Additional installation of a manual or electric stirrer is possible

For more information see page → 2-4

Contents

Solenoid metering pumps, components and metering systems page

1 Low-pressure Metering Pumps 1-1

1.0 Overview of Low Pressure Metering Pumps 1-1
1.0.1 How to Find the Right Pump Type? 1-1
1.1 Motor Driven Metering Pump alpha 1-3
1.1.1 Motor Driven Metering Pump alpha 1-3
1.1.2 Identity Code Ordering System 1-5
1.1.3 Spare Parts Kits, Replacement Diaphragms 1-6
1.2 Solenoid Driven Metering Pump Beta® 1-7
1.2.1 Solenoid Driven Metering Pump Beta® 1-7
1.2.2 Identity Code Ordering System 1-10
1.2.3 Spare Parts Kits, Replacement Diaphragms 1-11
1.3 Solenoid Driven Metering Pump gamma/ X 1-13
1.3.1 Solenoid Driven Metering Pump gamma/ X 1-13
1.3.2 Identity Code Ordering System 1-17
1.3.3 Spare Parts Kit for gamma/ X 1-18
1.4 Solenoid Driven Metering Pump delta® 1-20
1.4.1 Solenoid Driven Metering Pump delta® with Regulated Solenoid Drive 1-20
1.4.2 Identity Code Ordering System 1-23
1.4.3 Spare Parts Kits, Replacement Diaphragms 1-24
1.5 Precision Plunger Metering Pump mikro delta® 1-25
1.5.1 Precision Plunger Metering Pump mikro delta® 1-25
1.5.2 Identity Code Ordering System 1-27
1.5.3 Spare Parts 1-28
1.5.4 mikro delta® Installation Accessories 1-29
1.6 Pneumatic Metering Pump Pneumados 1-30
1.6.1 Pneumatic Metering Pump Pneumados b 1-30
1.6.2 Identity Code Ordering System 1-32
1.6.3 Ordering Example for Installation Accessories 1-33
1.6.4 Spare Parts Kits 1-34
1.7 Peristaltic Pumps DULCO®flex 1-35
1.7.1 Peristaltic Pump DULCO®flex DF2a 1-35
1.7.2 Identity Code Ordering System 1-36
1.7.3 Peristaltic Pump DULCO®flex DF3a 1-37
1.7.4 Identity Code Ordering System 1-38
1.7.5 Peristaltic Pump DULCO®flex DF4a 1-39
1.7.6 Identity Code Ordering System 1-40
1.8 Flow Meter DulcoFlow® for Product Range Sigma/ 1 1-41
1.8.1 Flow Meter DulcoFlow® 1-41
1.9 Hydraulic/Mechanical Installation Accessories 1-44
1.9.1 Foot Valves for Low-Pressure Metering Pumps 1-44
1.9.2 Injection Valve for Low-Pressure Metering Pumps 1-47
1.9.3 Injection Lances, Non-Return Valves for Low-Pressure Metering Pumps 1-52
1.9.4 Back Pressure Valves / Relief Valves for Low-Pressure Metering Pumps 1-53
1.9.5 Flushing Assemblies and Overload Protection Assemblies for Low-Pressure Metering Pumps 1-56
1.9.6 Hoses, Pipes 1-57
1.9.7 Pressure Accumulator 1-60
1.9.8 Pulsation Damper for Low-Pressure Metering Pumps 1-62
1.9.9 Suction Lances, Suction Kit Without Level Switch 1-63
1.9.10 Suction Lances, Suction Assemblies with Two-Stage Level Switch 1-66
1.9.11 Float Switches 1-70
1.9.12 Metering Monitor, Signal Cable 1-73
1.9.13 Safety Equipment 1-75
1.9.14 Connection Kits for Low-Pressure Metering Pumps 1-76
1.9.15 Wall Brackets for Metering Pumps 1-77
1.9.16 Contact Water Meters for Use in Potable Water and Accessories 1-79

Contents

Solenoid metering pumps, components and metering systems		page
1.10	Mechanical/Hydraulic Special Accessories	1-82
1.10.1	Spare Parts Kits	1-82
1.10.2	Pump Diaphragms	1-83
1.10.3	Custom Valve Balls/Valve Springs	1-84
1.10.4	Connector Parts/Fittings	1-85
1.11	Application Examples	1-89
1.11.1	Volume-proportional Metering of Chlorine Bleach Solution in Potable Water	1-89
1.11.2	Shock Metering of Biocide in Cooling Water Circuit	1-90
2	**Tanks and Transfer Pumps**	**2-1**
2.0	Overview of Tanks and Transfer Pumps	2-1
2.0.1	Selection Guide	2-1
2.1	PE Metering Tanks and Collecting Pans	2-2
2.1.1	Dosing Tanks	2-2
2.1.2	PE Stackable Collecting Pans for Dosing Tanks	2-5
2.1.3	Spare Parts	2-6
2.2	Accessories for Metering Tanks	2-7
2.2.1	Fittings and Detachable Parts	2-7
2.2.2	Stirrers	2-8
2.3	Eccentric Screw Pump Spectra	2-11
2.3.1	Eccentric Screw Pump Spectra for Pumping Polymer Solutions	2-11
2.3.2	Spare Parts	2-13
2.4	Centrifugal Pump von Taine®	2-14
2.4.1	Centrifugal Pump von Taine®	2-14
2.4.2	Spare Parts Kits	2-18
2.5	Air-Operated Diaphragm Pump Duodos	2-19
2.5.1	Air-operated Diaphragm Pump Duodos	2-19
2.5.2	Spare Parts Kits	2-20
2.6	Barrel Pump DULCO®Trans	2-22
2.6.1	Barrel Pump DULCO®Trans	2-22
2.7	Rotary Lobe Pumps	2-24
2.7.1	Rotary Lobe Pumps	2-24
2.8	Peristaltic Pump DULCO®flex	2-25
2.8.1	Peristaltic Pump DULCO®flex	2-25
2.8.2	Peristaltic Pump DULCO®flex DFAa	2-26
2.8.3	Peristaltic Pump DULCO®flex DFBa	2-28
2.8.4	Peristaltic Pump DULCO®flex DFCa	2-34
2.8.5	Peristaltic Pump DULCO®flex DFDa	2-40
2.8.6	Spare Parts	2-48
2.9	Application Examples	2-51
2.9.1	Filling a Day Tank	2-51
2.9.2	Filling Day Tanks	2-52
2.9.3	Deacidification of Potable Water	2-53
3	**Metering Systems**	**3-1**
3.0	Overview of Metering Systems DULCODOS®	3-1
3.0.1	Selection Guide	3-1
3.1	Metering System DULCODOS® eco	3-2
3.1.1	Metering System DULCODOS® eco	3-2
3.1.2	Identity Code Ordering System, 35 litres	3-3
3.1.3	Identity Code Ordering System, 60 litres	3-4
3.1.4	Identity Code Ordering System, 100 litres	3-5
3.1.5	Identity Code Ordering System, 140 litres	3-6
3.1.6	Identity Code Ordering System, 250 litres	3-7
3.1.7	Identity Code Ordering System, 500 litres	3-8
3.1.8	Identity Code Ordering System, 1000 litres	3-9
3.2	Metering System DULCODOS® universal	3-10
3.2.1	Metering System DULCODOS® universal	3-10
3.3	Metering System DULCODOS® panel	3-11
3.3.1	Metering System DULCODOS® panel	3-11

Contents

Solenoid metering pumps, components and metering systems	page
3.3.2 Identity Code Ordering System, Beta® and gamma/ X, DN 10	3-12
3.3.3 Identity Code Ordering System for Sigma/ 1, DN 10	3-13
3.3.4 Identity Code Ordering System for Sigma/ 1, DN 15	3-14
3.3.5 Identity Code Ordering System for Sigma/ 2, DN 15	3-15
3.3.6 Identity Code Ordering System for Sigma/ 2, DN 20	3-16
3.3.7 Identity Code Ordering System for Sigma/ 3, DN 25	3-17
3.3.8 Identity Code Ordering System for Sigma/ 3, DN 32	3-18
3.4 DULCODOS® Hydrazin Metering Systems	3-19
3.4.1 Metering System DULCODOS® Hydrazin	3-19
3.5 DULCODOS® PPLA Liquid Enzyme Metering Systems	3-20
3.5.1 Metering System DULCODOS® PPLA	3-20
3.6 Metering System DULCODOS® modular	3-21
3.6.1 Metering System DULCODOS® modular	3-21
3.7 Application Examples	3-22
3.7.1 Proportional Metering of Phosphate	3-22
3.7.2 Inhibitor Metering in Cooling Water	3-23
3.7.3 Inhibitor Metering in Boiler Feed Water	3-24
4 Domestic Water Systems	**4-1**
4.0 Systems for Domestic Water Installations	4-1
4.0.1 Proportional Flow Dosing System for Liquid Dosing	4-1
4.1 Metering System Promatik®	4-2
4.1.1 Metering System Promatik®	4-2
4.1.2 Metering System Promatik®	4-3
4.2 Chemicals for Water Treatment	4-4
4.2.1 Chemicals	4-4
5 ProMinent® Chemical Resistance List	**5-1**

Overview of Low Pressure Metering Pumps

How to Find the Right Pump Type?

Low-pressure metering pumps for practically all liquid chemicals:

the wide range of materials and extremely reliable function make these pumps veritable all-rounders - even under the toughest conditions. You'll find the optimum metering pump for your application in this broad product range from **0.74 to 75 l/h at a back pressure of 25 - 2 bar.**

Tip

The performance overview will assist you with rapid pre-selection. Determine the right product range of metering pumps based on a given back pressure (bar) and pump capacity (l/h).

All our low-pressure metering pumps are self-priming!

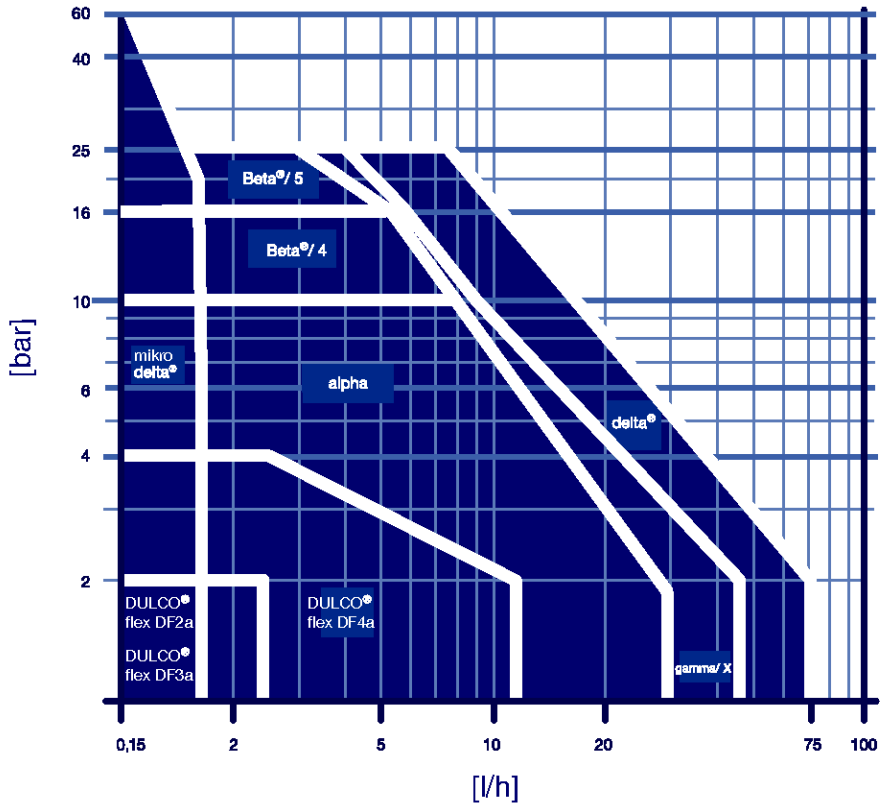

SG_0028_C

Back pressure [bar] as a function of feed rate [l/h]

Important note

ProMinent® metering pumps in the capacity range of **over 75 l/h or over 25 bar,** as well as metering pumps approved for use in premises at risk of gas explosions are included in volume 3 "Motor-driven and process metering pumps for all capacity ranges".

Please use our Pump Guide for assistance in making a quick selection; www.pump-guide.com.

1.1 Motor Driven Metering Pump alpha

1.1.1 Motor Driven Metering Pump alpha

The cost-effective solution for simple applications in the lower performance range.

Capacity range 1.0 – 30.6 l/h, 10 – 2 bar

The motor-driven metering pump alpha is the metering pump for liquid media and the optimum solution for simple applications. Robust, low-noise, chemical-resistant, with precise metering and good suction capacity.

Various pump types are available as a combination of 2 gears and 4 sizes of dosing head in materials PVDF and clear acrylic/PVC, enabling you to match the pump perfectly to your metering process.

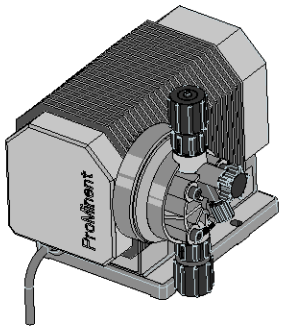

P_ALP_0004_SW

Your benefits

- Precise metering and good suction capacity by soft controlled suction and compression strokes
- Tough plastic housing – shock-proof and chemical-resistant
- Suitable for higher viscosity media, thanks to spring-loaded valves
- Low-noise operation

Technical details

- Stroke length adjustment by changing the eccentricity on the pump drive when the pump is idle
- Stroke length adjustment in 10% steps
- Diaphragm deflection from the centre position
- Soft controlled suction and compression strokes

Field of application

All low capacity applications where constant metering is required.

Dimensional drawing of the alpha

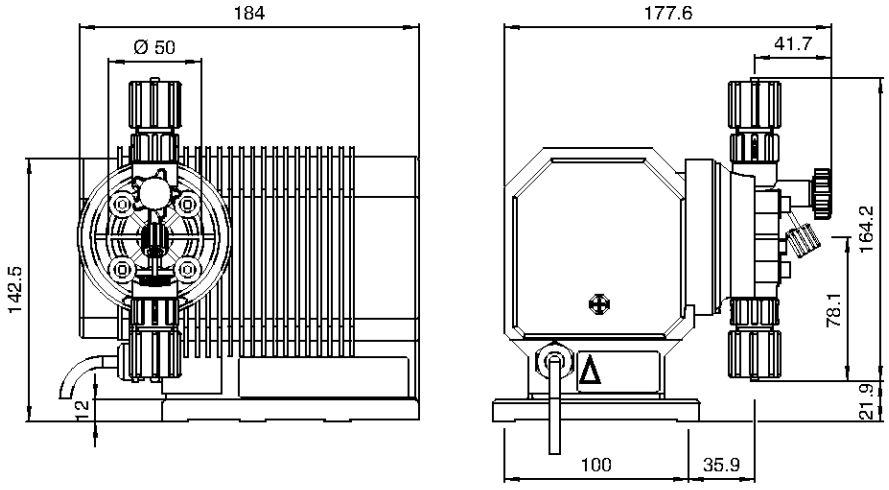

P_ALP_0006_SW3

Dimension drawing of the alpha - dimensions in mm

1.1 Motor Driven Metering Pump alpha

Technical Data

Pump type	Delivery rate at max. back pressure			Delivery rate at medium back pressure			Number of strokes	Stroke length	Connection size o Ø x i Ø	Suction lift	Shipping weight
	bar	l/h	ml/stroke	bar	l/h	ml/stroke	Strokes/min	mm	mm	mWC	kg
50 Hz version											
ALPc 1001	10	1.0	0.29	5	1.1	0.32	30	2	6 x 4	5.1	3.0
ALPc 1002	10	1.8	0.52	5	2.1	0.60	58	2	6 x 4	5.1	3.0
ALPc 1004	10	3.5	1.01	5	3.9	1.12	58	3	8 x 5	5.1	3.0
ALPc 1008	10	7.7	1.00	5	8.6	1.12	128	3	8 x 5	5.1	3.0
ALPc 0707	7	6.9	1.98	3	7.7	2.21	58	3	8 x 5	4.1	3.0
ALPc 0417	4	17.0	2.51	2	18.3	2.76	128	3	8 x 5	4.1	3.0
ALPc 0230	2	30.6	3.98	1	32.7	4.26	128	3	12 x 9	3.1	3.0
60 Hz version											
ALPc 1001	10	1.2	0.29	5	1.3	0.31	36	2	6 x 4	5.1	3.0
ALPc 1002	10	2.2	0.53	5	2.6	0.63	69	2	6 x 4	5.1	3.0
ALPc 1004	10	4.1	0.99	5	4.7	1.14	69	3	8 x 5	5.1	3.0
ALPc 1008	10	8.9	0.96	5	10.4	1.13	154	3	8 x 5	5.1	3.0
ALPc 0707	7	8.3	2.00	3	9.2	2.22	69	3	8 x 5	4.1	3.0
ALPc 0417	4	20.6	2.45	2	21.9	2.75	154	3	8 x 5	4.1	3.0
ALPc 0230	2	34.4	3.72	1	39.2	4.24	154	3	12 x 9	3.1	3.0

All data refers to water at 20 °C.

Materials in Contact With the Medium

	Liquid end	Suction/discharge connector	Ball seal	Seals	Balls
PPE	Polypropylene	Polypropylene	EPDM	EPDM	Ceramic
PPB	Polypropylene	Polypropylene	FKM	FKM	Ceramic
NPE	Acrylic glass	PVC	EPDM	EPDM	Ceramic
NPB	Acrylic glass	PVC	FKM	FKM	Ceramic
PVT	PVDF	PVDF	PVDF	PTFE	Ceramic

Metering diaphragm with PTFE coating for all types.

FKM = Fluorine Rubber

Motor Data

Type	Split pole motor with integrated thermal overload protection
Electrical connection	220-240 V, 50/60 Hz (version A)
Power	50 W (at 230 V/50 Hz)
Power consumption	0.4 A (at 230 V/50 Hz)

Warranty: The warranties listed under "General Terms and Conditions of Sale" apply, although there is a warranty period of 12 months for the alpha pump drive



1.1 Motor Driven Metering Pump alpha

1.1.2 Identity Code Ordering System

alpha series, version c

ALPc	Type	Capacity (50 Hz / 60 Hz)			
		l/h	bar	l/h	bar
	1001	1.0	10	1.2	10
	1002	1.8	10	2.2	10
	1004	3.5	10	4.1	10
	1008	7.7	10	8.9	10
	0707	6.9	7	8.3	7
	0417	17.0	4	20.6	4
	0230	30.6	2	34.4	2

		Liquid end material
	PPE	Polypropylene/polypropylene/EPDM
	PPB	Polypropylene/polypropylene/FKM
	NPE	Acrylic/PVC/EPDM
	NPB	Acrylic/PVC/FKM
	PVT	PVDF/PVDF/PTFE

		Valve springs
	2	without valve spring, with bleeding
	3	with 2 valve springs approx. 0.1 bar, material 1.4571, with bleeding

		Hydraulic connectors
	0	Standard according to technical data

		Version
	0	With ProMinent® logo

		Electrical connection
	A	230 V, 50/60 Hz, 2 m, Euro. plug
	B	230 V, 50/60 Hz, 2 m, Swiss plug
	C	230 V, 50/60 Hz, 2 m, Austral. plug

		Accessories	
		0	No ancillary equipment
		1	with foot and metering valve, 2 m PVC suction line, 5 m PE metering line

FKM = Fluorine Rubber



1.1.3 Spare Parts Kits, Replacement Diaphragms

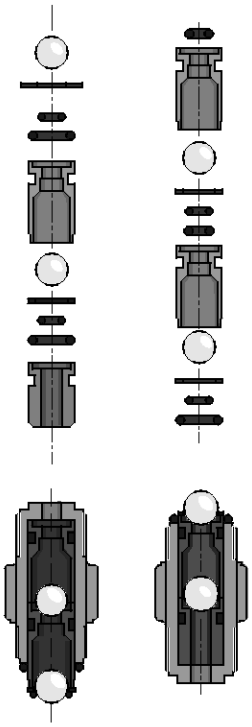

pk_1_008

Spare parts kits for alpha

Spare parts kits for alpha, consisting of

1 pump diaphragm
1 suction valve compl.
1 discharge valve compl.
2 valve balls
1 connector set

Type		Order no.
for alpha c, type 1001, 1002, 1004, 1008	PPE	1001647
	PPB	1001655
	NPE	1001716
	NPB	1001724
	PVT, PPT, NPT	1023110
for alpha c, type 0707, 0417	PPE	1001649
	PPB	1001657
	NPE	1001718
	NPB	1001726
	PVT, PPT, NPT	1023112
for alpha c, type 0230	PPE	1001650
	PPB	1001658
	NPE	1001719
	NPB	1001727
	PVT, PPT, NPT	1023113

Replacement Diaphragms

Type	Order no.
For alpha c 1001, 1002, 1004, 1008	1000247
For alpha c 0707, 0417	1000249
For alpha c 0230	1000250

Accessories

- Foot Valves for Low-Pressure Metering Pumps see page → 1-44
- Injection Valve for Low-Pressure Metering Pumps see page → 1-47
- Hoses, Pipes see page → 1-57
- Suction Lances, Suction Kit Without Level Switch see page → 1-62
- Connector Parts/Fittings see page → 1-84

Spare Parts

- Custom Valve Balls/Valve Springs See page → 1-83

1.2.1 Solenoid Driven Metering Pump Beta®

Equipped with all the features and properties for superior process management.

Capacity range 0.74 – 32 l/h, 25 – 2 bar

All-purpose solenoid metering pump for metering liquid media in water treatment and chemical processes: Solenoid driven metering pump Beta®. Cost-effective, overload-proof, adaptable to existing signal transducers.

A range of different pump types and material combinations are available for virtually all metering applications. The virtually wear-free solenoid drive guarantees an exceptionally long service life even under maximum load.

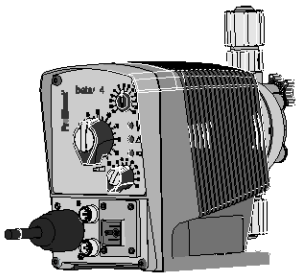

P_BE_0048_SW1
Beta® b

NEW

Your benefits

- Simple adjustment of metering capacity via stroke rate and stroke length
- Adaptation to existing signal transducers by external control via potential-free contacts with pulse step-up and step-down
- Suitable for use with almost all liquid chemicals thanks to the available material combinations: PP, PVDF, clear acrylic, PTFE and stainless steel
- Self-bleeding dosing head design in clear acrylic/PVC and PP
- Virtually wear-free solenoid drive: economical and overload-proof
- Economical operation with up to 50% energy-savings, thanks to higher pump efficiency
- Everything in sight and under control: 3 LED display for operating, warning and error messages

Technical details

- External control via potential-free contacts with pulse step-up and step-down to adapt to existing signal transducers of 64:1 to 1:64
- Optional external control via 0/4 – 20 mA and potential-free contacts with pulse step-up and step-down of 32:1 to 1:32
- Stroke rate adjustment in 10% increments of 10 – 100% corresponds to 18 – 180 strokes/minute
- Continuous stroke length adjustment of 0 – 100% (recommended 30 – 100%)
- Connector for 2-stage level switch
- Wide-range electrical connection: 100 – 230 V, 50/60 Hz
- Optional relay module, can also be retrofitted easily and securely
- Low voltage design 12 – 24 V DC

Field of application

- Metering liquid media in water treatment and chemical processes

Dimensional drawing of Beta®
Material design PP

Type	E	F
1000-1604	19.5	179
0708-0220	7	186.5
1008-0420	14	191.5
0232	1.5	200.5

Type	K	L	M
1000-1604	71	105.5	Ø 70
0708-0220	77.5	111	Ø 90
1008-0232	74	107.5	Ø 90
0232	77.5	94.5	Ø 110

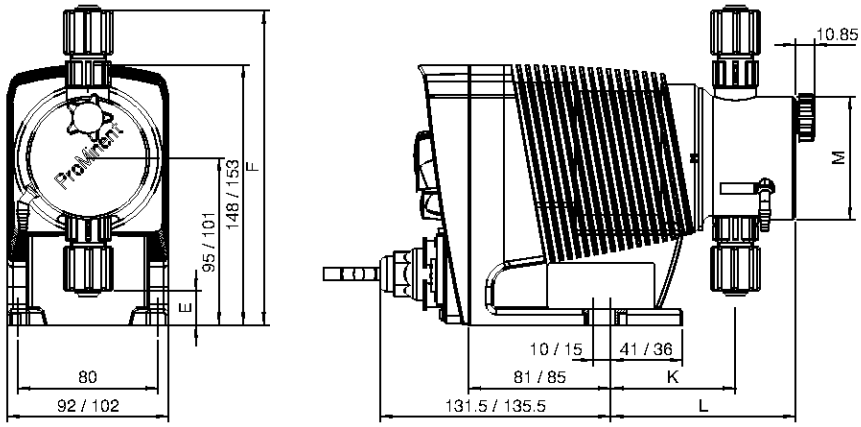

P_BE_0069_SW3

Dimensional drawing of Beta®, Material version PP - dimensions in mm

1.2 Solenoid Driven Metering Pump Beta®

Dimensional drawing of Beta®
Material design NP

Type	E	F
1000-1604	19	172
0708-0220	7.2	183
2504	24.5	178.5
1008-0420	14	188
0232	3.2	199

Type	K	L	M
1000-1604	77	105	Ø 70
0708-0220	77.5	105.5	Ø 90
2504	77	105	Ø 70
1008-0420	74	102	Ø 90
0232	76	104.5	Ø 110

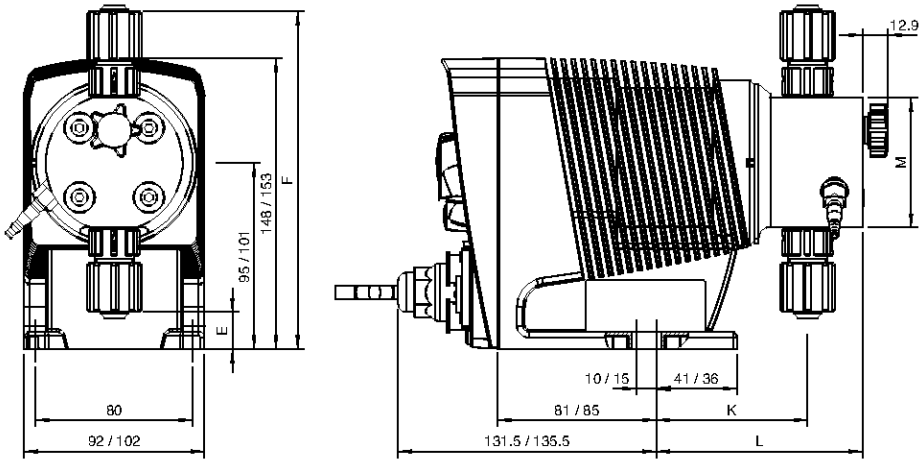

P_BE_0070_SW3

Dimensional drawing of Beta®, Material version NP - dimensions in mm

Dimensional drawing of Beta®
Material design PV

Type	E	F
1604	19	179
0708-0220	8	185.5
1008-0420	14	191.5
0232	3.2	199

Type	K	L	M
1604	71	83	Ø 70
0708-0220	73	90	Ø 90
1008-0420	73	90	Ø 90
0232	76	93	Ø 110

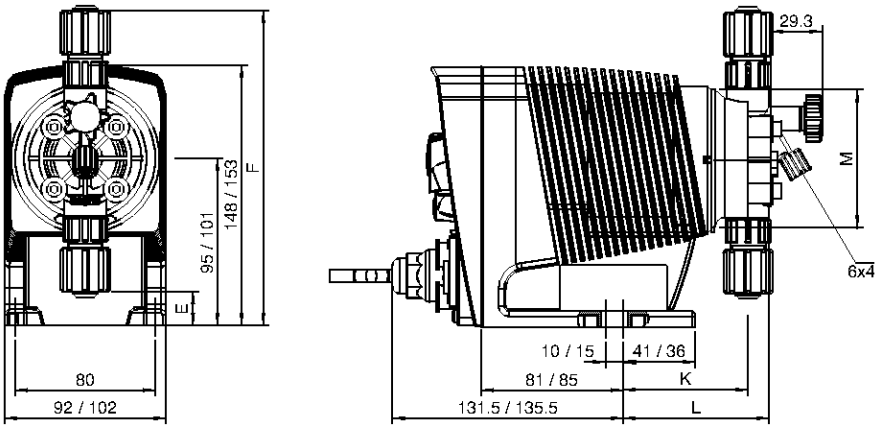

P_BE_0071_SW3

Dimensional drawing of Beta®, Material version PV - dimensions in mm



1.2 Solenoid Driven Metering Pump Beta®

Technical Data

Pump type	Delivery rate at max. back pressure			Delivery rate at medium back pressure			Number of strokes	Connection size o Ø x i Ø	Suction lift	Average power consumption	Shipping weight	
	bar	l/h	ml/ stroke	bar	l/h	ml/ stroke	Strokes/ min	mm	mWC	W	PP, NP, PV, TT kg	SS kg
Beta® b												
BT4b 1000***	10	0.7	0.07	5.0	0.8	0.08	180	6 x 4	6.0**	7,2	2.9	3.6
BT4b 1601***	16	1.1	0.10	8.0	1.4	0.13	180	6 x 4	6.0**	9,6	2.9	3.6
BT4b 1602***	16	2.2	0.20	8.0	2.5	0.24	180	6 x 4	6.0**	11,2	2.9	3.6
BT4b 1604***	16	3.6	0.33	8.0	4.3	0.40	180	6 x 4	6.0**	15,2	3.1	3.9
BT4b 0708***	7	7.1	0.66	3.5	8.4	0.78	180	8 x 5	6.0**	15,2	3.1	3.9
BT4b 0413	4	12.3	1.14	2.0	14.2	1.31	180	8 x 5	3.0**	15,2	3.1	3.9
BT4b 0220	2	19.0	1.76	1.0	20.9	1.94	180	12 x 9	2.0**	15,2	3.3	4.4
BT5b 2504	25	2.9	0.27	10.0	5.0	0.46	180	8 x 4****	6.0**	19,2	4.5	5.3
BT5b 1008	10	6.8	0.63	5.0	8.3	0.76	180	8 x 5	6.0**	19,2	4.5	5.3
BT5b 0713	7	11.0	1.02	3.5	13.1	1.21	180	8 x 5	4.0**	19,2	4.5	5.3
BT5b 0420	4	17.1	1.58	2.0	19.1	1.77	180	12 x 9	3.0**	19,2	4.7	5.8
BT5b 0232	2	32.0	2.96	1.0	36.2	3.35	180	12 x 9	2.0**	19,2	5.1	6.6
Beta® b metering pumps with self-bleeding dosing head without bypass												
BT4b 1602	10	1.4	0.13	8.0	1.7	0.16	180	6 x 4	1.8**	11,2	2.9	–
BT4b 1604	10	2.7	0.25	8.0	3.6	0.33	180	6 x 4	1.8**	15,2	3.1	–
BT4b 0708	7	6.6	0.61	3.5	7.5	0.69	180	8 x 5	1.8**	15,2	3.1	–
BT4b 0413	4	10.8	1.00	2.0	12.6	1.17	180	8 x 5	1.8**	15,2	3.1	–
BT4b 0220	2	16.2	1.50	1.0	18.0	1.67	180	12 x 9	2.0**	15,2	3.3	–
BT5b 1008	10	6.3	0.58	5.0	7.5	0.69	180	8 x 5	1.8**	19,2	4.5	–
BT5b 0713	7	10.5	0.97	3.5	12.3	1.14	180	8 x 5	1.8**	19,2	4.5	–
BT5b 0420	4	15.6	1.44	2.0	17.4	1.61	180	12 x 9	1.8**	19,2	4.7	–

Beta® b metering pumps with dosing heads for higher-viscosity media have a 10-20% lower capacity and are not self-priming. G 3/4-DN 10 connector with d 16-DN 10 hose nozzle.

* The given performance data constitutes guaranteed minimum values, calculated using water as the medium at room temperature.

** Suction lift with a filled dosing head and filled suction line, with a self-bleeding dosing head with air in the suction line.

*** Pressure-reduced pump types are available in the pressure ratings 4, 7 and 10 bar for special applications, for example in the swimming pool sector. More detailed information is available upon request.

**** With stainless steel design 6 mm connector width.

All data refers to water at 20 °C.

Materials in Contact With the Medium

	Dosing head	Suction/pressure connector	Ball seat	Seals	Balls
PPT	Polypropylene	PVDF	PVDF	PTFE	Ceramic
NPT	Clear acrylic	PVDF	PVDF	PTFE	Ceramic
PVT	PVDF	PVDF	PVDF	PTFE	Ceramic
TTT	PTFE with carbon	PTFE with carbon	Ceramic	PTFE	Ceramic
SST	Stainless steel material no. 1.4404	Stainless steel material no. 1.4404	Ceramic	PTFE	Ceramic

Metering reproducibility: ± 2% when used according to the operating instructions.

Permissible ambient temperature -10 °C to +45 °C

Degree of protection: IP 65, insulation class F

<emphasis>Scope of delivery: Metering pump with mains cable (2 m) and plug, connecting kit for hose/ pipe connection as per table.</emphasis>

1.2 Solenoid Driven Metering Pump Beta®

1.2.2 Identity Code Ordering System

Beta® Version b

BT4b	Type	Capacity bar	l/h	Liquid end/valve material	Seal/diaphragm material	Liquid end version	Hydraulic connections	Version	Logo	Power supply	Cable and plug	Relay	Accessories	Control type	Control Variants	Options on request
	1000	10	0.74													
	1601	16	1.10													
	1602	16	2.20													
	1604	16	3.60													
	0708	7	7.10													
	0413	4	12.30													
	0220	2	19.00													
BT5b																
	2504	25	2.90													
	1008	10	6.80													
	0713	7	11.00													
	0420	4	17.10													
	0232	2	32.00													
				PP Polypropylene/PVDF												
				NP Acrylic glass/PVDF												
				PV PVDF/PVDF												
				TT PTFE with carbon, PTFE												
				SS Stainless steel 1.4404/1.4404												
					T PTFE/PTFE coated											
						0 Non-bleed version, no valve spring, for TT, SS and type 0232 only										
						1 Non-bleed version, with valve spring, for TT, SS and type 0232 only										
						2 With deaerator, no valve spring, PP, PV, NP only, not type 0232										
						3 With deaerator, with valve spring, PP, PV, NP only, not type 0232										
						4 version for highly viscous media, only PVT, types 1604, 0708, 1008, 0413, 0713, 0220, 0420										
						7 self-bleeding without bypass, only for NPT and PVT, not for types 1000, 1601 and 0232										
							0 Standard according to technical data									
							5 Connector for 12/6 hose, delivery side only									
							9 Connector for 10/4 hose, delivery side only									
								0 Standard								
									0 with ProMinent® logo							
										U 100-230 V ± 10%, 50/60 Hz						
										M 12 – 24 V DC, only with BT4b						
										N 24 V DC, only for BT5b						
											A 2 m European					
											B 2 m Swiss					
											C 2 m Australian					
											D 2 m USA					
											1 2 m, open-ended					
												0 No relay				
												1 Fault indicating relay, normally energised, 1 x changeover contact 230 V - 2 A				
												3 Fault indicating relay, normally de-energised, 1 x changeover contact 230 V - 2 A				
												4 as 1 + pacing relay 2 x normally open contacts 24 V - 100 m				
												5 as 3 + pacing relay 2 x normally open contacts 24 V - 100 mA				
													0 No accessories			
													1 With foot and dosing valve, 2 m PVC suction tubing, 5 m PE discharge tubing			
														0 No lock		
														1 With lock: manual operation locked when external cable plugged in		
															0 without analogue control	
															A with analogue control 0/4 – 20 mA	
																0 0 No options



1.2.3 Spare Parts Kits, Replacement Diaphragms

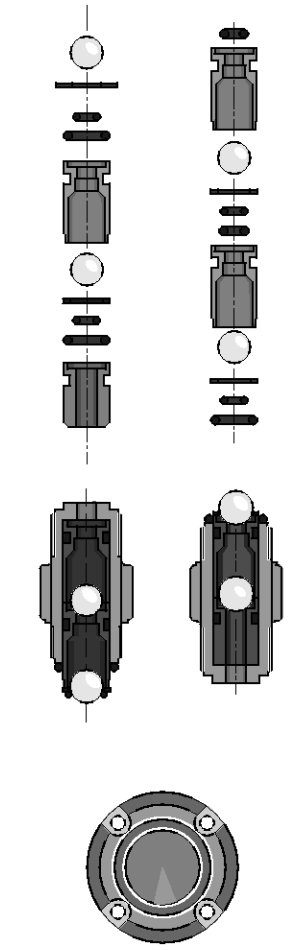

pk_1_008

Spare Parts Kits for Solenoid Driven Metering Pump Beta®

Spare parts kits for Beta®, consisting of:

1 Diaphragm
1 Suction valve, complete
1 Discharge valve, complete
2 Valve balls
1 Connector kit

Suction and discharge valve set not included with stainless steel version.

Type	Materials in contact with the medium	Order no.
Type 1000	PPT, NPT, PVT	1023107
	TTT	1001737
	SST	1001729
Type 1601	PPT, NPT, PVT	1023108
	TTT	1001738
	SST	1001730
Type 1602	PVT, PPT, NPT	1023109
	TTT	1001739
	SST	1001731
Type 1604 and Type 2504	PVT, PPT, NPT	1035332
	PVT HV	1035342
	TTT	1035330
	SST	1035331
Type 0708 and Type 1008	PVT, PPT, NPT	1023111
	PVT4	1019067
	TTT	1001741
	SST	1001733
Type 0413 and Type 0713	PVT, PPT, NPT	1023112
	PVT4	1019069
	TTT	1001742
	SST	1001734
Type 0220 and Type 0420	PVT, PPT, NPT	1023113
	PVT4	1019070
	TTT	1001754
	SST	1001735
Type 0232	PVT, PPT, NPT	1023124
	TTT	1001755
	SST	1001736

Accessories

- Foot Valves see page → 1-44
- Injection Valve see page → 1-47
- Hoses, Pipes see page → 1-57
- Suction Lances, Suction Kit Without Level Switch see page → 1-62
- Connector Parts/Fittings see page → 1-84

Spare Parts

- Custom Valve Balls/Valve Springs See page → 1-83

1.2 Solenoid Driven Metering Pump Beta®

Spare Parts Kits for Solenoid Driven Metering Pump Beta® with Self-Bleeding Dosing Head

Spare parts kits for metering pumps with self-bleeding dosing head without bypass, consisting of:

1 Diaphragm
1 Suction valve, complete
1 Discharge valve, complete
2 Valve balls
1 Connector kit

Type	Materials in contact with the medium	Order no.
Type 1602	PVT7, NPT7	1047830
Type 1604	PVT7, NPT7	1047858
Type 0708 and Type 1008	PVT7, NPT7	1047832
Type 0413 and Type 0713	PVT7, NPT7	1047833
Type 0220 and Type 0420	PVT7, NPT7	1047837

Spare Diaphragms for Solenoid Driven Metering Pump Beta®

Type	Materials in contact with the medium	Order no.
Type 1000	all materials	1000244
Type 1601	all materials	1000245
Type 1602	all materials	1000246
Type 1604 and Type 2504	all materials	1034612
Type 0708 and Type 1008	all materials	1000248
Type 0413 and Type 0713	all materials	1000249
Type 0220 and Type 0420	all materials	1000250
Type 0232	all materials	1000251



1.3 Solenoid Driven Metering Pump gamma/ X

1.3.1 Solenoid Driven Metering Pump gamma/ X



gamma/ X – the proven best-seller intelligently extended

Capacity range 2.3 ml/h – 45 l/h, 25 – 2 bar

The solenoid diaphragm metering pump gamma incorporates a wealth of e**X**cellent ingenuity! With integrated pressure measurement, it ensures the smooth running of your metering process. The gamma/X is ideal for all metering work involving liquid media.

NEW

The new solenoid diaphragm metering pump gamma/ X is user-friendly and has an outstandingly long service life, just like its predecessor. An ingenious solenoid control measures the back pressure and protects the system from overload. This technology makes a pressure sensor superfluous, meaning that operating safety can be significantly increased: no additional parts come into contact with the feed chemical, there are no additional sealing surfaces and no electronic components come into contact with the feed chemical. Whether the metering volume fluctuates or hydraulic failures affect the metering process – the gamma/ X keeps everything at your fingertips.

It independently ensures a trouble-free metering process and should the pump ever need maintenance its service module draws attention to this.



P_GX_001_SW1

NEW

Your benefits

- Optional Bluetooth interface for convenient adjustment and configuration of the operating parameters
- Virtually wear-free solenoid drive, overload-proof and economical
- Suitable for continuous micro-metering from 1 ml/h thanks to the regulated solenoid drive
- Simple adjustment of the capacity directly in l/h
- Direct input of the required final concentration in volume-proportional metering tasks
- Detection of hydraulic malfunctions or blocked discharge lines ensures smooth process
- Integrated pressure measurement and display for greater safety during commissioning and in the process
- Adaptation to existing signal transducers by external control via potential-free contacts with pulse step-up and step-down
- External control via 0/4-20 mA standard signal with adjustable assignment of signal value to stroke rate
- Integrated 1-month timer for timed metering tasks
- Guaranteed metering by means of automatic bleeding
- Connection to process control systems via bus interfaces, such as Profibus, Profinet, CAN bus and others on request

Technical details

- Available material combinations: PP, PVDF, clear acrylic, PTFE and stainless steel
- Special dosing head designs for gaseous and high-viscosity media
- Illuminated LC display and 3-LED display for operating, warning and error messages, visible from all sides
- Factor with external contact control 99:1 - 1:99
- Batch operation with max. 65,536 strokes/start pulse
- Stroke rate adjustment in 1 stroke/hour increments from 0-12,000 strokes/h
- Continuous electronic stroke length adjustment from 0 - 100% (recommended 30 - 100%)
- Connector for 2-stage level switch
- External control via 0/4-20 mA standard signal with adjustable assignment of signal value to stroke rate
- Optional 4-20 mA output for remote transmission of stroke length and stroke rate
- Universal power supply unit 100 V - 230 V, 50/60 Hz
- Optional 230 V relay module, can also be retrofitted easily and securely
- Optional 24 V combined relay, can also be retrofitted easily and securely

Field of application

- Can be integrated into automated processes and used in all industries.
- The pump can work as a control unit with the timer, for example in cooling water treatment.

1.3 Solenoid Driven Metering Pump gamma/ X

Dimensional drawing of gamma/ X Material version PPT2

Type	Ø A	B
0245	110	76
0424, 0220	90	76
0715, 0414	90	74
1009, 0708	90	74
1604	70	71
1602	70	71

Type	C	D	E
0245	-	14	209
0424, 0220	110	24	202
0715, 0414	107	24	202
1009, 0708	108	24	202
1604	106	32	198
1602	106	32	198

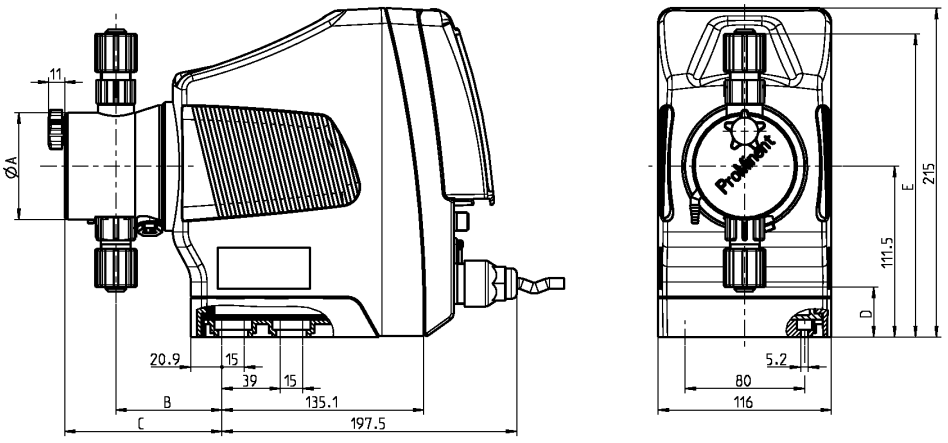

P_G_0055_SW3

Dimensional drawing of gamma/ X, Material design PPT – dimensions in mm

Dimensional drawing of gamma/ X Material version NPT2

Type	Ø A	B
0245	110	76
0424, 0220	90	76
0715, 0414	90	76
1009, 0708	90	74
1604, 2504	70	77
1602	70	77

Type	C	D	E
0245	105	14	210
0424, 0220	104	23	200
0715, 0414	104	23	200
1009, 0708	102	23	200
1604, 2504	105	33	191
1602	105	33	191

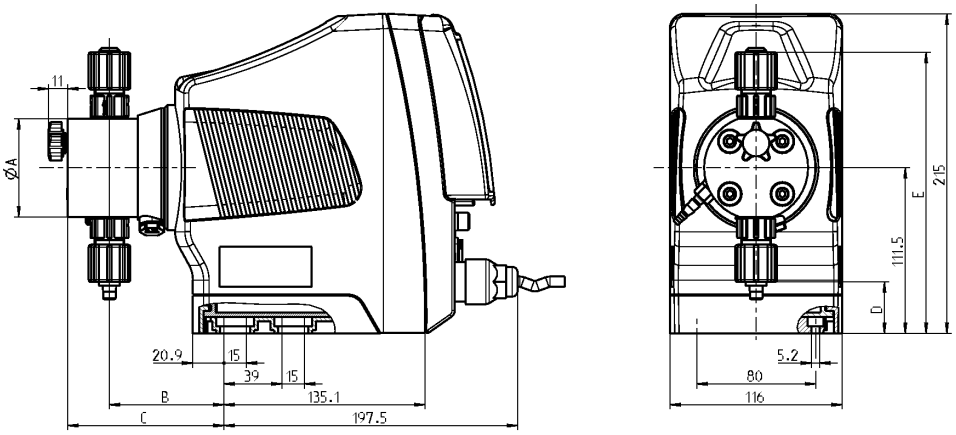

P_G_0056_SW3

Dimensional drawing of gamma/ X, Material design NPT – dimensions in mm



1.3 Solenoid Driven Metering Pump gamma/ X

Dimensional drawing of gamma/ X
Material version PVT2

Type	Ø A	B
0245	110	76
0424, 0220	90	79
0715, 0414	90	73
1009, 0708	90	75
1604	70	71
1602	70	71

Type	C	D	E
0245	-	14	209
0424, 0220	90	25	203
0715, 0414	90	25	203
1009, 0708	92	25	203
1604	84	36	196
1602	84	36	196

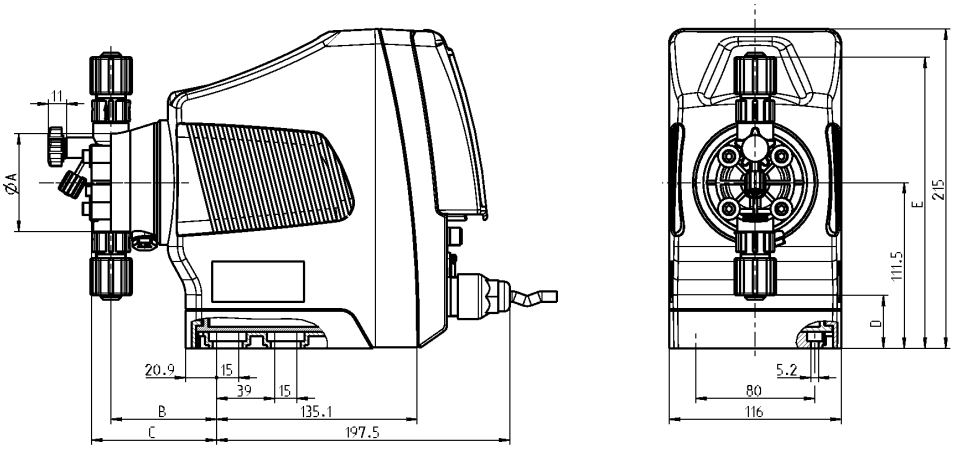

P_G_0057_SW3

Dimensional drawing of gamma/ X, Material design PVT – dimensions in mm

1.3 Solenoid Driven Metering Pump gamma/ X

Technical Data

Pump type	Delivery rate at max. back pressure			Number of strokes	Connecti-on size o Ø x i Ø	Suction lift	Shipping weight	
	bar	l/h	ml/stroke	Strokes/ min	mm	mWC	PP, NP, PV, TT kg	SS kg
gamma/ X								
GMXa 1602	16	2.3	0.19	200	6 x 4	6.0**	3.6	4.1
GMXa 1604	16	3.6	0.30	200	6 x 4	5.0**	3.6	4.1
GMXa 0708	7	7.6	0.63	200	8 x 5	4.0**	3.7	5.0
GMXa 0414	4	13.5	1.13	200	8 x 5****	3.0**	3.7	5.0
GMXa 0220	2	19.7	1.64	200	12 x 9	2.0**	3.7	5.0
GMXa 2504	25	3.8	0.32	200	8 x 4***	4.0**	4.9	5.5
GMXa 1009	10	9.0	0.75	200	8 x 5	3.0**	5.1	6.5
GMXa 0715	7	14.5	1.21	200	8 x 5****	3.0**	5.1	6.5
GMXa 0424	4	24.0	2.00	200	12 x 9	3.0**	5.1	6.5
GMXa 0245	2	45.0	3.70	200	12 x 9	2.0**	5.2	7.0
gamma/ X metering pumps with self-bleeding dosing head without bypass								
GMXa 1602	10	0.9	0.08	200	6 x 4	1.8**	3.6	–
GMXa 1604	10	1.6	0.13	200	8 x 5	1.8**	3.6	–
GMXa 0708	7	5.7	0.48	200	8 x 5	1.8**	3.7	–
GMXa 0414	4	12.0	1.00	200	8 x 5	1.8**	3.7	–
GMXa 0220	2	17.4	1.45	200	12 x 9	1.8**	3.7	–
GMXa 1009	10	6.0	0.50	200	8 x 5	1.8**	5.1	–
GMXa 0715	7	12.9	1.08	200	8 x 5	1.8**	5.1	–
GMXa 0424	4	19.2	1.60	200	12 x 9	1.8**	5.1	–

! gamma/ X metering pumps with dosing heads for high-viscosity media have a 10 – 20% lower capacity and are not self-priming. G 3/4-DN 10 connector with d 16-DN 10 hose nozzle.

* The given performance data represents guaranteed minimum values, calculated using water as the medium at room temperature.

** Suction lift with a filled dosing head and filled suction line, with a self-bleeding dosing head with air in the suction line

*** With stainless steel design 6 mm connector width

**** With stainless steel design 12 mm connector width

All data refers to water at 20 °C.

Materials in Contact With the Medium

	Dosing head	Suction/pressure connector	Ball seat	Seals	Balls
PPT	Polypropylene	Polypropylene	PVDF	PTFE	Ceramic
NPT	Clear acrylic	PVC	PVDF	PTFE	Ceramic
PVT	PVDF	PVDF	PVDF	PTFE	Ceramic
TTT	PTFE with carbon	PTFE with carbon	Ceramic	PTFE	Ceramic
SST	Stainless steel material no. 1.4404	Stainless steel material no. 1.4404	Ceramic	PTFE	Ceramic

Metering reproducibility: ±2% when used according to information in the operating instructions

Permissible ambient temperature: -10 °C to +45 °C

Mean power consumption: 24/30 W

Degree of protection: IP 65, insulation class F

✓ **Scope of supply**
Metering pump with mains cable, connector kit for hose/tube connector as per table.



1.3.2 Identity Code Ordering System

gamma/ X product range, version a

GMXa	Type	Capacity bar	Capacity l/h	GMXa	Type	Capacity bar	Capacity l/h
	1602	16	2.3		2504	25	3.8
	1604	16	3.6		1009	10	9.0
	0708	7	7.6		0715	7	14.5
	0414	4	13.5		0424	4	24.0
	0220	2	19.7		0245	2	45.0

Liquid end/valve material

PP	Polypropylene/PVDF, with self-bleeding design polypropylene/polypropylene
NP	Clear acrylic/PVDF, with self-bleeding design clear acrylic/PVC
PV	PVDF/PVDF
TT	PTFE/PTFE
SS	Stainless steel 1.4404/1.4404

Seal/diaphragm material

T	PTFE/PFTE coated

Liquid end version

0	Non-bleed version, no valve springonly with NP, TT and SS and type 0245
1	Non-bleed version, with valve springonly with NP, TT and SS and type 0245
2	Bleed function, no valve springsonly with PP, PV, NP not for type 0245
3	Bleed function, with valve springsonly with PP, PV, NP not for type 0245
4	Version for highly viscous mediaonly with PV, types 1604, 0708, 0414, 2504, 1009, 0715, 0424
7	self-bleeding without bypass, only for NPT and PVT

Hydraulic connections

0	Standard according to technical data
5	Discharge side connection for hose 12/6, suction side standard, only with materials PP, NP and PV
9	Discharge side connection for hose 10/4, suction side standard , only with materials PP, NP and PV

Diaphragm rupture indicator

0	Without diaphragm rupture indicator
1	With diaphragm rupture indicator, optical sensor

Version

0	Standard

Logo

0	with ProMinent® logo

Power supply

U	100-230 V, ±10%, 50/60 Hz

Cable and plug

A	2 m European
B	2 m Swiss
C	2 m Australian
D	2 m USA
E	2 m Great Britain
1	2 m, open-ended

Relay, pre-set to

0	No relay
1	1 x changeover contact 230 V – 2 A, fault indicating relay N/C
4	2 x N/O 24 V – 100 mA, fault indicating relay N/C + pacing relay
C	1 x N/O 24 V – 100 mA, fault indicating relay N/C 1 + 4 – 20 mA output

Accessories

0	No accessories
1	With foot valve and discharge valve, 2 m PVC suction tubing, 5 m PE delivery tubeonly with PP, PV and NP, not with PVT4

Control version

0	Manual + external 1:1 with pulse control
3	Manual + external with pulse control + analogue 0/4 - 20 mA
C	as 3 + CANopen*
C	as 3 + CANopen*®
C	as 3 + CANopen*
R	as 3 + PROFIBUS®-DP interface M12*
–	*No relay can be selected with these options.

Metering monitor

0	Pulse signal input

Remote stop

0	without Bluetooth
B	with Bluetooth

Language

DE	German
EN	English
FR	French
ES	Spanish

1.3.3 Spare Parts Kit for gamma/ X

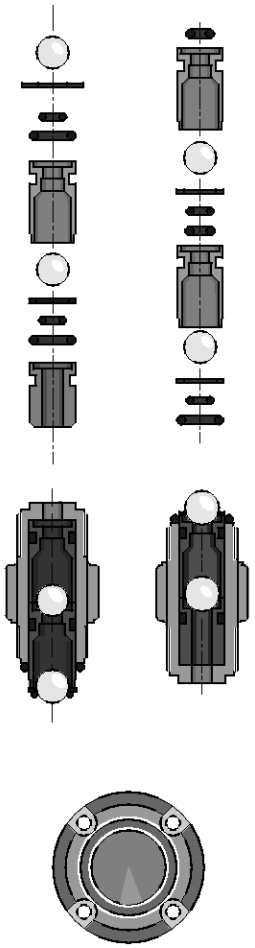

pk_1_008

Spare Parts Kit for gamma/ X

Spare parts kits forgamma/ X, consisting of:

1 Diaphragm
1 Suction valve, complete
1 Discharge valve, complete
2 Valve balls
1 Connector kit

Suction and discharge valve set not included with stainless steel version.

Type		Order no.
Type 1602	PVT, PPT, NPT	1023109
	TTT	1001739
	SST	1001731
Type 1604 and Type 2504	PVT, PPT, NPT	1035332
	PVT HV	1035342
	TTT	1035330
	SST	1035331
Type 0708 and Type 1009	PVT, PPT, NPT	1023111
	PVT4	1019067
	TTT	1001741
	SST	1001733
Type 0414 and Type 0715	PVT, PPT, NPT	1023112
	PVT4	1019069
	TTT	1001742
	SST	1001734
Type 0220 and Type 0424	PVT, PPT, NPT	1051129
	PVT HV	1051134
	TTT	1051151
	SST	1051139
Type 0245	PVT, PPT, NPT	1051130
	TTT	1051152
	SST	1051140

Spare Parts Kits for Solenoid Driven Metering Pump gamma/ X with Self-Bleeding Dosing Head

Spare parts kits for metering pumps with self-bleeding dosing head without bypass, consisting of:

1 Diaphragm
1 Suction valve, complete
1 Discharge valve, complete
1 Bleed valve, complete
2 Valve balls
1 Connector kit

Type	Materials in contact with the medium	Order no.
Type 1602	PVT7, NPT7	1051105
Type 1604	PVT7, NPT7	1051106
Type 0708 and Type 1009	PVT7, NPT7	1051109
Type 0414 and Type 0715	PVT7, NPT7	1051110
Type 0220 and Type 0424	PVT7, NPT7	1051111

1.3 Solenoid Driven Metering Pump gamma/ X

Spare Diaphragms for Solenoid Driven Metering Pump gamma/ X

Type	Materials in contact with the medium	Order no.
Type 1602	all materials	1000246
Type 1604 and Type 2504	all materials	1034612
Type 0708 and Type 1009	all materials	1000248
Type 0414 and Type 0715	all materials	1000249
Type 0220 and Type 0424	all materials	1045456
Type 0245	all materials	1045443

Accessories

- Foot Valves see page → 1-44
- Injection Valve see page → 1-47
- Hoses, Pipes see page → 1-57
- Suction Lances, Suction Kit Without Level Switch see page → 1-62
- Connector Parts/Fittings see page → 1-84

Spare Parts

- Custom Valve Balls/Valve Springs See page → 1-83

1.4 Solenoid Driven Metering Pump delta®

1.4.1 Solenoid Driven Metering Pump delta® with Regulated Solenoid Drive



Virtually an all-rounder and just the right solution for exacting requirements.

Capacity range 7.5 – 75 l/h, 25 – 2 bar

A high-end diaphragm metering pump with regulated solenoid drive. Virtually wear-free, extremely economical and with a self-bleeding dosing head design.

A range of different pump types and material combinations are available for virtually all metering applications. The optional 1-month process timer offers a variety of installation options. The pump achieves maximum precision even with fluctuating back pressure thanks to the regulated solenoid drive. This guarantees an exceptionally long service life even under maximum load. The integrated monitoring function optoGuard® reports faulty hydraulic conditions, such as overpressure or ruptured metering line. The large illuminated LC display guarantees excellent legibility of all displayed values. The capacity is shown directly in l/h.



pk_1_131_2

Your benefits

- Adjustment of the capacity directly in l/h
- Adaptation to existing signal transducers by external control via potential-free contacts with pulse step-up and step-down
- External control via 0/4 – 20 mA standard signal with adjustable assignment of signal value to stroke rate
- Organise work processes conveniently with the optional process timer. The alternative to timers or PLCs.
- Optional PROFIBUS® interface for connection to process control systems
- Suitable for use with almost all liquid chemicals, thanks to the available material combinations PVDF, clear acrylic and stainless steel
- Virtually wear-free solenoid drive: overload-proof and economical
- Everything in sight and under control: illuminated LED display and 3-LED display for operating, warning and error messages
- Reporting of hydraulic error statuses, blocked points of injection, ruptured metering lines and air and/or gas in the dosing head, which the integrated monitoring system optoGuard® detects
- Automatic bleed function
- Maximum dosing precision by compensation of pressure fluctuations
- Also ideal for continuous micro-metering from around 6 ml/h

Technical details

- External control via potential-free contacts with pulse step-up and step-down to adapt to existing signal transducers of 99:1 to 1:99
- Batch operation with max. 65,536 strokes/start pulse
- External control via 0/4 – 20 mA standard signal with adjustable assignment of signal value to stroke rate
- Stroke rate adjustment in 1 stroke/hour steps of 0 to 12,000 strokes/h and/or 200 strokes/min
- Stroke length continuously adjustable between 0 – 100% (recommended 30 – 100%)
- Connector for 2-stage level switch
- Dosing monitor input with adjustable number of tolerated defective strokes
- Optional optical diaphragm rupture indicator detects droplets behind the diaphragms
- Optional 4 – 20 mA output for remote transmission of stroke length and stroke rate
- "Concentration input" option for volume-proportional metering
- PROFIBUS® or CAN Open interface option
- Control module option with connecting option for chlorine, pH, ORP sensors or flow meter DFMa
- Wide-range electrical connection: 100 – 230 V, 50/60 Hz
- Optional relay module, can also be easily and reliably retrofitted

Field of application

They can be used in all industries and integrated into automated processes. Maximum process reliability through the regulated solenoid drive and opto-Guard® monitoring function. The pump can work as a control unit with the process timer, for example in cooling water treatment

1.4 Solenoid Driven Metering Pump delta®

Dimensional drawing of delta®
Material version PV

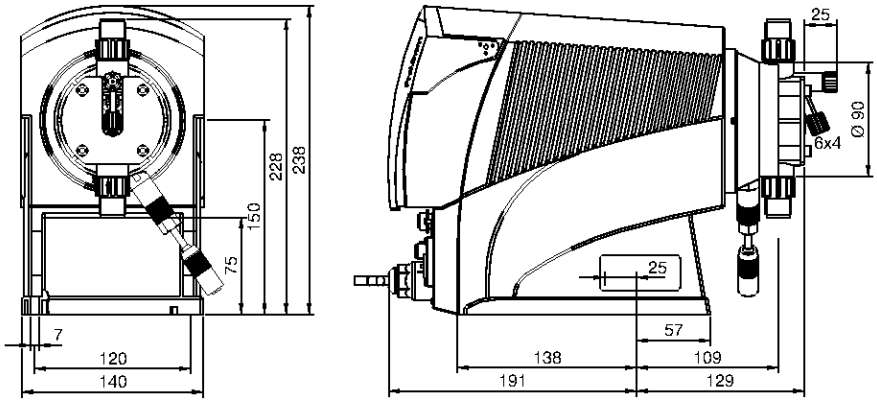

P_DE_0042_SW_2_SW3

Dimensional drawing of delta® type 1612-0730, Material version PV - dimensions in mm

Dimensional drawing of delta®
Material version NP

Type	E	F
2508 / 1608	63	235
1612	60	239
1020	54	245
0730	53	246

Type	K	L
2508 / 1608	110	125
1612	110	125
1020	112	127
0730	112	127

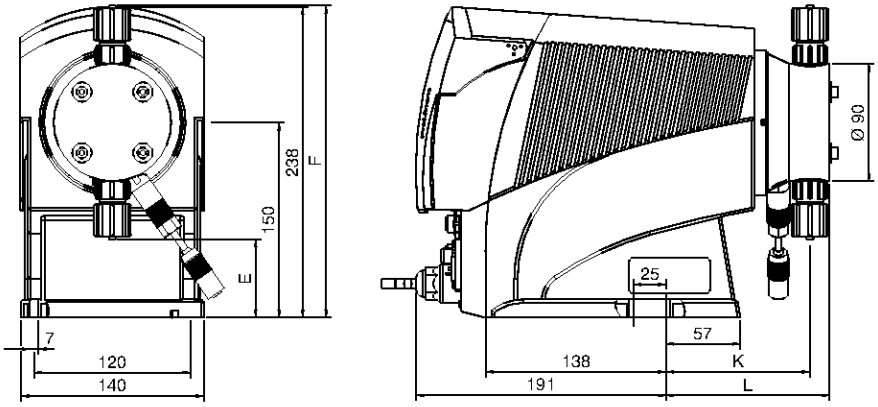

P_DE_0046_1_SW3

Dimensional drawing of delta® without bleed valve, Material version NP - dimensions in mm

1.4 Solenoid Driven Metering Pump delta®

Technical Data

Pump type	Max. pressure bar	Delivery rate l/h	Stroke volume ml/stroke	Max. stroke rate Strokes/min	Connector size outside Ø x inside Ø	Suction lift mWC	Shipping weight NPE, NPB, PVT / SST kg
delta®							
DLTa 1612	16	11.3	0.94	200	8 x 5 mm	6*	10/11
DLTa 1020	10	19.1	1.59	200	12 x 9 mm	5*	10/11
DLTa 0730	7	29.2	2.43	200	12 x 9 mm	5*	10/11
DLTa 0450	4	49.0	4.08	200	G 3/4 - DN 10	3*	10/11
DLTa 0280	2	75.0	6.25	200	G 3/4 - DN 10	2*	10/11
DLTa 2508	25	7.5	0.62	200	8 x 4** mm	5*	10/11
DLTa 1608	16	7.8	0.65	200	8 x 5** mm	5*	10/11
delta® metering pumps with self-bleeding dosing head without bypass*							
DLTa_1608	16	3.8	0.32	200	8 x 5 mm	1.8	10
DLTa_1612	16	6.5	0.54	200	8 x 5 mm	1.8	10
DLTa_1020	10	14.0	1.17	200	12 x 9 mm	1.8	10
DLTa_0730	7	28.0	2.33	200	12 x 9 mm	1.8	10

delta® metering pumps with dosing heads for higher-viscosity media have a 10-20 % lower capacity and are not self-priming. G 3/4 - DN 10 connector with d 16-DN 10 hose nozzle.

* Suction lift (mWS) = Suction lift with filled dosing head and filled suction line

** With stainless steel design 6 mm connector width

All data refers to water at 20 °C.

Materials in Contact With the Medium

Design	Dosing head	Suction/pressure connector	Ball seat	Seals	Valve balls
NPE	Clear acrylic	PVC	EPDM	EPDM	Ceramic
NPB	Clear acrylic	PVC	FKM	FKM	Ceramic
PVT	PVDF	PVDF	PVDF	PTFE	Ceramic
SST (8-12 mm)	Stainless steel 1.4404	Stainless steel 1.4404	Ceramic	PTFE	Ceramic
SST (DN 10)	Stainless steel 1.4404	Stainless steel 1.4404	PTFE with carbon	PTFE	Ceramic

Design of connectors

Plastic	8-12 mm	Hose squeeze connection
	DN 10	d16 DN 10 hose nozzle
Stainless steel	6-12 mm	Swagelok system
	DN 10	Rp 3/8 insert

Diaphragm with PTFE coating.

Repeatability of metering ±2% when used according to the operating instructions.

Permissible ambient temperature: –10 °C to 45 °C

Mean power consumption 78 W

Degree of protection IP 65, insulation class F

Scope of supply
Metering pump with mains cable, connector kit for hose/tube connector as per table.



1.4.2 Identity Code Ordering System

delta® series

DLTa	Type	Capacity bar	Capacity l/h	DLTa	bar	l/h
	2508	25	7.5	0730	7	29.2
	1608	16	7.8	0450	4	49.0
	1612	16	11.3	0280	2	75.0
	1020	10	19.1			

Liquid end/valve material

PV	PVDF/PVDF not for pump type 2508
NP	Acrylic glass/PVC only for pump type 2508, 1608, 1612, 1020, 0730
SS	Stainless steel/stainless steel

Seal/diaphragm material

T	Only with PV and SS
S	PTFE/diaphragm additionally with FKM coating for silica-laden media, not for types 0450 and 0280
B	FKM-B, only with NP
E	EPDM, only with NP

Liquid end version

0	Non-bleed, without valve spring, only with material TT and SS
1	Non-bleed, with valve spring, only with material TT and SS
2	Bleed version, without valve spring, only with material NP and PV
3	Bleed version, with valve spring, only with material NP and PV
4	HV version for higher-viscosity media, only for types 1608, 1612,1020 and 0730
7	self-bleeding without bypass, only for type 1608, 1612, 1020 and 0730, only for material PV

Hydraulic connections

0	Standard connectors as per technical data
5	Discharge-side connector for 12/6 hose, suction-side standard, only with material NP and PV
F	Connector on discharge side for 8/4 hose, standard on suction side, only with material NP

Diaphragm rupture indicator

0	Without diaphragm rupture indication
1	With diaphragm rupture indicator, optical sensor
2	With dual diaphragm system and diaphragm rupture indicator, pressure sensor, only with material SS

Version

0	With ProMinent logo

Power supply

U	Universal controller 100-230 V 50/60 Hz

Cable and plug

A	2 m Europe	D	2 m USA / 115 V
B	2m Switzerland	1	2 m without plug
C	2 m Australia		

Relay, pre-set to

0	Without relay
1	1 x changeover contact 230 V – 8 A, fault indicating relay N/C
3	1 x changeover contact 230 V – 8 A, fault indicating relay N/O
4	2 x N/O 24 V – 100 mA, fault indicating relay N/C + pacing relay
5	2 x N/O 24 V – 100 mA, fault indicating relay N/O + pacing relay
A	2 x N/O 24 V – 100 mA, switch-off and warning relay N/C
C	1 x N/O 24 V – 100 mA, fault indicating relay N/C + 4 – 20 mA output
F	with automatic bleed valve, 230 V , not for pump type 2508
G	with automatic bleed valve, 24 V DC and relay output, not for pump type 2508

Accessories

0	Without accessories
1	With foot and metering valve, 2m suction line and 5 m discharge line
2	As 0 + measuring cup (only for type 2508, 1608, 1612, 1020, and 0730)
3	As 1 + measuring cup (only for type 2508, 1608, 1612, 1020, and 0730)

Control version

0	Manual + external contact with pulse control
3	Manual + external contact with pulse control + analogue 0/4-20 mA
4	as 0 + 4-week process timer
5	as 3 + 4-week process timer
C	as 3 + CANopen
M	As 3 + pH, ORP and chlorine + DFMA control module
R	as 3 + PROFIBUS® interface, M12

Access code

0	Without access code
1	With access code

Language

DE	german
EN	english
FR	french
ES	spanish

Pause/level

0	Pause N.C. contact level, N.C. contact



1.4.3 Spare Parts Kits, Replacement Diaphragms

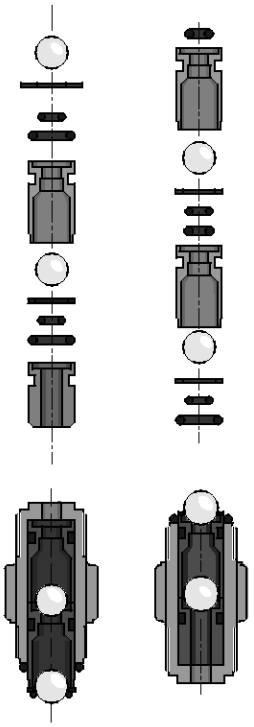

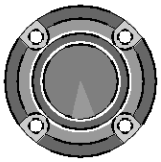

pk_1_008

Spare parts kits for delta®

Replacement parts kit for delta®, consisting of:

1 metering diaphragm
1 suction valve compl.
1 discharge valve compl.
2 valve balls
1 set of seals
1 connecting kit

Stainless steel version without suction and discharge valve compl.

Type	Materials in contact with the medium	Order no.
Type 2508	NPE2	1033172
	NPB2	1033171
	SST0	1030226
Type 1608	NPE2	1030620
	NPB2	1030611
	PVT2	1030225
	PVT4	1019066
	PVT7	1047831
	SST0	1030226
Type 1612	NPE2	1030536
	NPB2	1030525
	PVT2	1027081
	PVT4	1019067
	PVT7, NPT7	1047832
	SST0	1027086
Type 1020	NPE2	1030537
	NPB2	1030526
	PVT2	1027082
	PVT4	1019069
	PVT7, NPT7	1047833
	SST0	1027087
Type 0730	NPE2	1030621
	NPB2	1030612
	PVT2	1027083
	PVT4	1019070
	PVT7, NPT7	1047837
	SST0	1027088
Type 0450	PVT2	1027084
	SST0	1027089
Type 0280	PVT2	1027085
	SST0	1027090

Replacement diaphragms for delta® series

Type	Materials in contact with the medium	Order no.
Type 2508/1608	all materials	1030353
Type 1612	all materials	1000248
Type 1020	all materials	1000249
Type 0730	all materials	1000250
Type 0450	all materials	1000251
Type 0280	all materials	1025075

Accessories

- Foot Valves see page → 1-44
- Injection Valve see page → 1-47
- Hoses, Pipes see page → 1-57
- Suction Lances, Suction Kit Without Level Switch see page → 1-62
- Connector Parts/Fittings see page → 1-84

Spare Parts

- Custom Valve Balls/Valve Springs See page → 1-83

1.5 Precision Plunger Metering Pump mikro delta®

1.5.1 Precision Plunger Metering Pump mikro delta®

Continuous and highly precise metering in the micro-litre range with the latest generation of pumps.

Capacity range 150 – 1,500 ml/h, 60 – 20 bar

The precision plunger metering pump mikro delta® meters reliably, ultra-accurately and constantly in the microlitre range – one of the latest generation of solenoid metering pumps. Higher pressures can be achieved thanks to half the stroke length and double the stroke rate compared to the previous model.

The mikro delta® delivers the same litre outputs as its predecessor model. It does this at half stroke length and double stroke rate. This enables higher pressures to be provided. Double ball valves and an integrated back pressure valve guarantee highly precise and pressure-independent metering in the 0 - 60 bar range. The capacity ranges from 1-250 µl/stroke or 0.001 - 1500 ml/h.

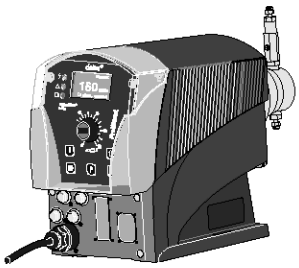

P_DE_0003_SW1

Your benefits

- Ideally suited for continuous micro-metering from approx. 0.2 l/h
- Adaptation to existing signal transducers by external control via potential-free contacts with pulse step-up and step-down
- External control via 0/4 – 20 mA standard signal with adjustable assignment of signal value to stroke rate
- Organise work processes conveniently with the optional process timer - the alternative to timers or PLC
- Optional PROFIBUS® interface for connection to process control systems
- Virtually wear-free solenoid drive: Overload-proof and cost-effective
- Everything in sight and under control: Illuminated LED display and 3-LED display for operating, warning and error messages
- Maximum dosing precision of ± 0.5% by compensation of pressure fluctuations

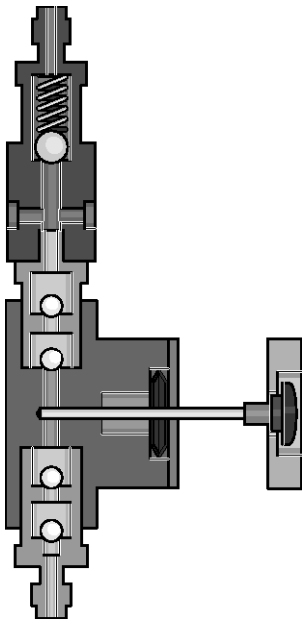

pk_1_010
Liquid end

Technical details

- Adjustment of the capacity directly in ml/h
- External control via potential-free contacts with pulse step-up and step-down to adapt to existing signal transducers of 99:1 to 1:99
- Batch operation with max. 65,536 strokes/start impulse
- External control via 0/4-20 mA standard signal with adjustable assignment of signal value to stroke rate
- Stroke rate adjustment in 1 stroke/hour steps of 0-6.000 strokes/h or 100 strokes/min
- Stroke length continuously adjustable between 0-100% (recommended 4-100%)
- Connector for 2-stage level switch
- PROFIBUS® or CAN Open interface option
- Wide-ranging electrical connection: 100-230 V, 50/60 Hz
- Optional relay module, can also be easily and reliably retrofitted

Field of application

For continuous micro-metering in laboratories and in manufacturing for the addition of very small quantities of liquid.

Materials in Contact With the Medium

Version	Dosing head	Suction/discharge connection	Valve balls	Valve seats	Piston	Valve seals	Plunger gaskets
TTT	PTFE with carbon	PTFE with carbon	ruby	ceramic	ceramic	PTFE	PTFE, white
TTG	PTFE with carbon	PTFE with carbon	ruby	ceramic	ceramic	PTFE	PTFE + graphite
SST	stainless steel 1.4571	stainless steel 1.4571	ruby	ceramic	ceramic	PTFE	PTFE, white
SSG	stainless steel 1.4571	stainless steel 1.4571	ruby	ceramic	ceramic	PTFE	PTFE + graphite

Permissible ambient temperature -10 °C ... +45 °C.

1.5 Precision Plunger Metering Pump mikro delta®

Technical Data

Pump type	Delivery rate at max. back pressure			Plunger Ø	Connection size hose oØ x iØ	Connection size piping oØ	Suction lift	Intake height	Perm. pre-pressure suction side	Back pressure valve holding pressure	Shipping weight
	bar	ml/h	µl/ stroke	mm	mm	mm	mWC	mWC	bar	bar	kg
Version TT											
100150 TT	10	145	24.17	2.5	1.75 x 1.15	–	6*	0.6**	5	2.5	10
100600 TT	10	580	96.67	5	1.75 x 1.15	–	6*	2.0**	5	2.5	10
101500 TT	10	1,480	246.67	8	3.20 x 2.40	–	4*	2.0**	5	1.5	10
Version SS											
600150 SS	60	145	24.17	2.5	1.75 x 1.15	1.58	6*	0.6**	30	2.5	11
400600 SS	40	580	96.67	5	1.75 x 1.15	1.58	6*	2.0**	20	2.5	11
201500 SS	20	1,480	246.67	8	3.20 x 2.40	3.18	4*	2.0**	10	1.5	11

* Suction lift with primed liquid end and primed suction line

** Intake height with clean and wetted valves. Feed chemical water at 20 °C. Intake height at 100 % stroke length, open vent screw and suction side as described.

Max. stroke rate 100 rpm.

All data refers to water at 20 °C.

Electrical Connection

Nominal power, approx.	38 W
Nominal current, approx.	0.64 ... 0.42 A
Start-up peak current, easing within 50 ms	8 ... 4 A

Dimensional drawing of mikro delta®
Material version TT and SS

Material version TT

Type	A	B
100150	243.9	150.1
100600	243.9	150.1
101500	256.2	150.1

Material version TT

Type	C	D	E
100150	105.1	159.1	Ø 49
100600	105.1	159.1	Ø 49
101500	92.3	161.1	Ø 49

Material version SS

Type	A	B
600150	256.2	150.1
400600	254.7	150.1
201500	256.2	150.1

Material version SS

Type	C	D	E
600150	92.3	161.1	Ø 49
400600	99	159.1	Ø 49
201500	92.3	161.1	Ø 49

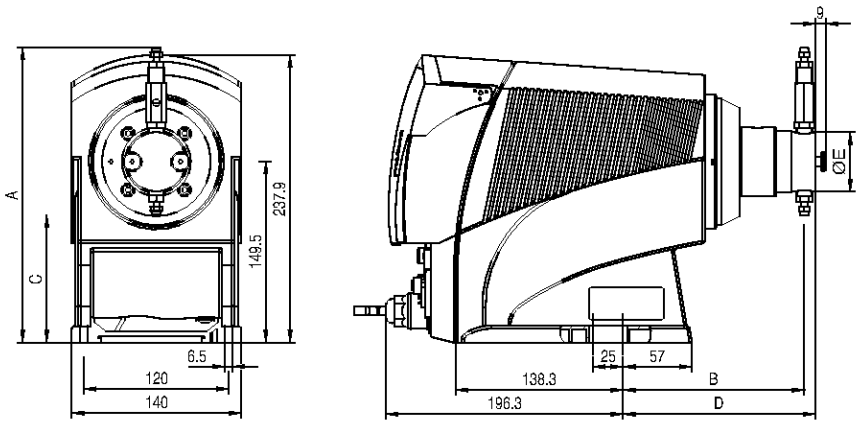

P_DE_0034_SW_mikro_SW3

Dimensional drawing of mikro delta®, Material version TT and SS - dimensions in mm

1.5 Precision Plunger Metering Pump mikro delta®

1.5.2 Identity Code Ordering System

mikro delta® series, version a

MDLa	Type	Capacity bar	ml/h		Dosing head	Sealing material	Liquid end version	Hydraulic connection	Logo	Electrical power supply	Cable and plug	Relay	Accesories	Control variants	Acces code	Language	Pause / Level
	100150	10	145	(only TT)													
	600150	60	145	(only SS)													
	100600	10	580	(only TT)													
	400600	40	580	(only SS)													
	101500	10	1,480	(only TT)													
	201500	20	1,480	(only SS)													
		Dosing head															
		SS		Stainless steel 1.4571													
		TT		PTFE with 25% carbon													
			Sealing material														
			T	PTFE pure white													
			G	PTFE with graphite													
				Liquid end version													
				0	no valve spring												
				1	with valve spring (not for type 100150 and 600150)												
					Hydraulic connection												
					0	Standard according to technical data											
						Logo											
						0	with ProMinent®-Logo										
						2	no ProMinent®-Logo										
							Electrical power supply										
							U	100 – 230 V ± 10%, 50/60 Hz									
								Cable and plug									
								A	2 m European								
								B	2 m Swiss								
								C	2 m Australian								
								D	2 m USA								
									Relay								
									0	no relay							
									1	Fault indicating relay, normally energised, 1x changeover contact, 230 V - 8 A							
									3	Fault indicating relay, normally de-energised, 1 x changeover contact, 230 V - 8 A							
									4	as 1 + pacing relay, 2 x normally open contact, 24 V - 100 mA							
									5	as 3 + pacing relay, 2 x normally closed contact, 24 V - 100 mA							
										Accesories							
										0	no accessories						
											Control variants						
											0	manual + external contact with pulse control					
											3	manual + external contact w. pulse control + analogue 0/4-20 mA					
											4	as 0 + Process Timer (1 month)					
											5	as 3 + Process Timer (1 month)					
											C	CANopen					
											R	as 3 + PROFIBUS®-interface, M12					
												Acces code					
												0	no acces code				
												1	with acces code				
													Language				
													DE	german			
													EN	english			
													FR	french			
													ES	spanish			
														Pause / Level			
														0	Pause, n.c., level n.c.		



1.5 Precision Plunger Metering Pump mikro delta®

1.5.3 Spare Parts

Spare piston

Type	Order no.
100150/600150	803149
100600/400600	803181
101500/201500	803182

Spare piston packing PTFE pure white

Type	Order no.
100150/600150	485431
100600/400600	485430
101500/201500	485432

Spare piston packing PTFE with graphite

Type	Order no.
100150/600150	485428
100600/400600	485427
101500/201500	485429

1.5.4 mikro delta® Installation Accessories

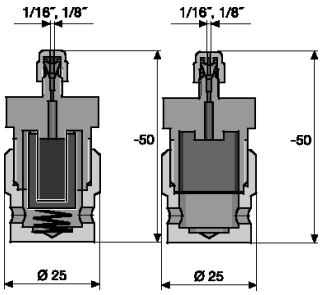

pk_1_015 pk_1_014

Stainless steel suction filter

Without check valve, interchangeable filter element. Material: 1.4404/1.4310/SS 316/PTFE

Connection		Order no.
1/16" - 15 µm	(For mikro 50 and 200 ml head) (Fig. pk_1_015) for tube Ø 1.58	803253
1/8" - 15 µm	(For mikro 500 ml head) (Fig. pk_1_015) for tube Ø 3.175	803254
1/8" - 60 µm	(For SK metering pumps) (Fig. pk_1_014) for tube Ø 3.175	803255

Replacement filter elements for suction filter

		Order no.
Sintered elements	15 µm	403814
Screen mesh	60 µm	404523

Stainless steel injection valve

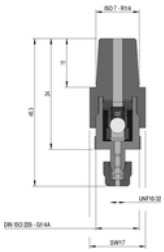
P_AC_0237_SW

Housing in 1.4404 and springs in 1.4571, PTFE seals.

Size	Connection		Order no.
Ø 20 x 48 mm	1/16" - 1/4"	for tube Ø 1.58 and 1.75 mm	803251
Ø 22 x 56 mm	1/8" - 1/4"	for tube Ø 3.175 and 3.2 mm	803252

Suction and discharge pipe

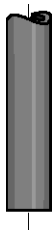
pk_1_013

	Permissible pressure bar	Order no.
PTFE 1.75 mm o. Ø x 1.15 mm i. Ø (1/16")	12*	037414
PTFE 3.2 mm o. Ø x 2.4 mm i. Ø (1/8")	8*	037415
Stainless steel pipe 1.4435 1.58 mm o. Ø x 0.9 mm i. Ø (1/16")	400*	1020774
Stainless steel pipe 1.4435 3.175 mm o. Ø x 1.5 mm i. Ø (1/8")	400*	1020775

* Permitted operating pressure at 20 °C, provided media is compatible and pipe is correctly connected.

Nipple

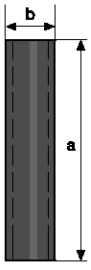

pk_1_017

1.4571 pipe nipple for mikro g/ 5 and gamma/ 4 SK for connecting 1/16" and 1/8" PTFE tubing.

	Order no.
Nipple 1/16" o. Ø 1.58 mm x i. Ø 0.9 mm, length 25 mm	402315
Nipple 1/8" o. Ø 3.175 mm x i. Ø 1.5 mm, length 30 mm	402316
Nipple 1/8-1/16" o. Ø 3.175 - 1.58 mm, length 45 mm	402317

1.6 Pneumatic Metering Pump Pneumados

1.6.1 Pneumatic Metering Pump Pneumados b

The ProMinent® Pneumados is a pneumatically operated diaphragm metering pump

Capacity range 0.76 – 16.7 l/h, 16 – 2 bar

The metering pump Pneumados has a pneumatic power end and can be used in places without electrical supply voltage, with suction stroke performed by spring force.

The compression stroke is provided by compressed air applied to a diaphragm, which drives the PTFE-coated metering diaphragm. The suction stroke is actuated by a spring-loaded force. The pump capacity is adjusted by the stroke length and stroke rate.

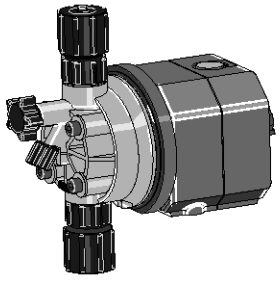

P_PN_0005_SW

Your benefits

- No electrical supply voltage needed
- Material version PVDF and stainless steel
- Stroke rate of up to 180 strokes/min
- Spring-loaded valves for higher-viscosity media
- Use wherever no electrical supply voltage is available

Technical details

- Compressed air requirement approx. 50 l/h, non-oiled compressed air preferred
- Length of the compressed air line between the valve and pump max. 1 metre
- Diaphragm deflection from the centre position

Field of application

- Metering and handling of animal feed
- Use in car wash facilities

Dimensional drawing for Pneumados b Material design PVDF

Type	A	D	E	F
1000	103	70	6x4	48
1601	105	70	6x4	49
1602	103	70	6x4	48
1005	107	90	8x5	48
0708	109	90	8x5	50
0413	109	90	8x5	50
0220	111	90	12x9	52

Type	B	C	G
1000	164	78	50
1601	176	90	50
1602	172	88	50
1005	189	92	66
0708	190	93	66
0413	181	88	66
0220	181	88	66

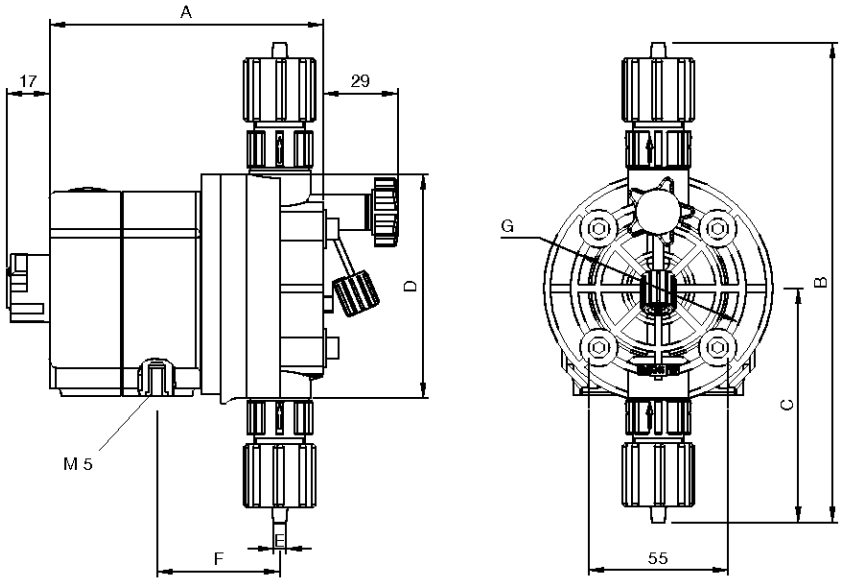

P_PN_0009_SW3

Dimensional drawing of Pneumados b, Material version PVC - dimensions in mm

1.6 Pneumatic Metering Pump Pneumados

Technical Data

Pump type	Delivery rate at max. back pressure			Number of strokes	Connector sizes	Suction lift	Shipping weight
	bar	l/h	ml/stroke	Strokes/min		mWC	kg
PNDb 1000	10	0.76	0.07	180	6 x 4	6.0	1.0 - 1.7
PNDb 1601	16	1.00	0.09	180	6 x 4	6.0	1.0 - 1.7
PNDb 1602	16	1.70	0.16	180	6 x 4	6.0	1.0 - 1.7
PNDb 1005	10	3.80	0.35	180	8 x 5*	5.0	1.2 - 1.9
PNDb 0708	7	6.30	0.58	180	8 x 5	4.0	1.2 - 1.9
PNDb 0413	4	10.50	0.97	180	8 x 5	3.0	1.2 - 1.9
PNDb 0220	2	16.70	1.55	180	12 x 9	2.0	1.2 - 1.9

All data refers to water at 20 °C.

* Stainless steel version 6 x 4 mm

Filtered compressed air 6 bar ±10%

Air consumption at 1 m feed line 47 l/min

Max. stroke rate 180 strokes/min

Connectors

Material	Øo x Øi	Version
For PV	6, 8 and 12 mm	Hose nozzle with clamping ring
For stainless steel SS	6, 8 and 12 mm	Swagelok system screw connection

Materials in Contact With the Medium

	Liquid end	Intake/pressure connection	Ball seal	Seals	Balls
PVT	PVDF	PVDF	PVDF	PTFE	Ceramic
SST	Stainless steel M. No. 1.4404	Stainless steel M. No. 1.4404	Ceramic	PTFE	Ceramic

DEVELOPAN® metering diaphragm with PTFE coating.

Metering reproducibility of ±2% when used in accordance with operating instructions. Permissible ambient temperature -10 °C to +50 °C.



1.6 Pneumatic Metering Pump Pneumados

1.6.2 Identity Code Ordering System

Pneumados product range, version b

PNDb	Type	Capacity		Liquid end/Valve material	Seal/diaphragm material	Liquid end version	Hydraulic connectors	Version	Power connector	Control type	Approvals
		bar	l/h								
	1000	10.0	0.76								
	1601	16.0	1.00								
	1602	16.0	1.70								
	1005	10.0	3.80								
	0708	7.0	6.30								
	0413	4.0	10.50								
	0220	2.0	16.70								
				PV PVDF/PVDF							
				SS SS Stainless steel 1.4404/1.4404							
					S Metakorin diaphragm with Viton-B seal						
					T Standard diaphragm with PTFE seal						
						0 Non-bleed, without valve spring only for SS					
						1 Non-bleed, with valve springonly for SS					
						2 With bleed valve, without valve spring only for PV					
						3 With bleed valve, with valve spring only for PV					
							0 Standard connection as per technical data				
								0 With ProMinent logo			
									0 G 1/4 connector, compressed air 6 bar		
									1 6 x 4 connector, compressed air 6 bar		
										0 Single-acting (standard), without control valves	
										1 Electropneumatic actuation, with electric clock generator 24 V DC, solenoid valve 24 V DC, wall bracket and mounting material for solenoid valve	
											01 CE



1.6.3 Ordering Example for Installation Accessories

	Order no.
1 x PVC foot valve with filter and Ø 6 back check valve	924557
1 x PVC injection valve with Ø 6 - R 1/2 ball check valve	924680
1 x 5 m suction, discharge and compressed air line, PE 6 x 4 mm	1004492
1 x compressed air connector for Pneumados G 1/4 - 6 mm quick release connector LCK 1/4"	354641
1 x Pneumados wall bracket including fixtures and fittings	1030028

For electrical controller

	Order no.
1 x 3/2-way solenoid valve MHE3, 24 V DC, with connection fittings 6/4mm	1030275
1 x retaining bracket for solenoid valve	1030276
1 x sound absorber for solenoid valve	1030277
1 x electrical pulse generator 30-180 strokes/min., 24Vdc	1030351

Electrical/Pneumatic controller

Schematic diagram

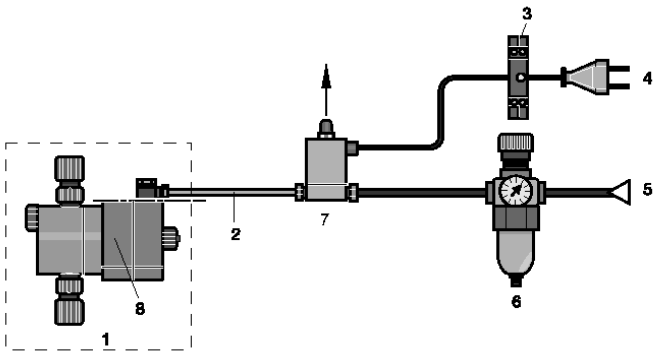

1 Pneumados supply limit
2 PE 6x4 max. 1 m
3 Electrical pulse generator
4 230 V/50-60 Hz mains connector
5 Compressed air 6 bar
6 Maintenance unit
7 3/2 way solenoid valve with sound absorber
8 Pneumados

pk_1_035

1.6 Pneumatic Metering Pump Pneumados

1.6.4 Spare Parts Kits

Replacement parts kit for Pneumados b consisting of

1 Metering diaphragm
1 Suction connector compl.
1 Discharge connector compl.
2 Valve balls
1 Set of seals
1 Connecting kit

Stainless steel version without suction and discharge valve compl.

Type		Order no.
Type 1000	PPT, NPT, PVT	1023107
	SST	1001729
Type 1601	PPT, NPT, PVT	1023108
	SST	1001730
Type 1602	PVT, PPT, NPT	1023109
	SST	1001731
Type 1005	PVT, PPT, NPT	1023110
	SST	1001732
Type 0708	PVT, PPT, NPT	1023111
	SST	1001733
Type 0413	PVT, PPT, NPT	1023112
	SST	1001734
Type 0220	PVT, PPT, NPT	1023113
	SST	1001735

Accessories

- Foot Valves see page → 1-44
- Injection Valve see page → 1-47
- Hoses, Pipes see page → 1-57
- Suction Lances, Suction Kit Without Level Switch see page → 1-62
- Connector Parts/Fittings see page → 1-84

Spare Parts

- Custom Valve Balls/Valve Springs See page → 1-83

1.7.1 Peristaltic Pump DULCO®flex DF2a

The optimum pump product range for use in swimming pools, hot tubs, and spa zones.

Capacity range 0.4 – 2.4 l/h at max. 1.5 bar back pressure

The peristaltic pump DULCO®flex DF2a meters chemicals functionally, cost-effectively and quietly – ideal for use in swimming pools, hot tubs, and in spa and wellness facilities.

The feed chemical is transported by the rotor squeezing the hose in the direction of flow. This explains why there is no need for valves. The feed chemical is thus handled with care. Typical applications: wherever lower pump pressure is sufficient. For example when metering conditioners in private pools.

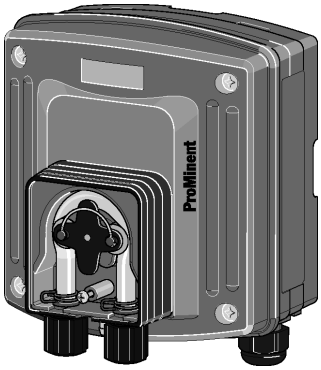

pk_1_130

Your benefits

- Smooth inner wall reduces deposits.
- Hose materials: PharMed® or Viton®
- Virtually silent operation
- Simple handling
- Enhanced service life of the hose due to spring-loaded rollers, which keep the rolling pressure constant
- Robust and protected against spray water from all sides: Housing made of impact-resistant and chemical-resistant PPE

Technical details

- Self-priming against max. 1.5 bar
- Control or flow control via ON/OFF power supply
- Degree of protection IP 65
- OEM versions on request

Field of application

- Meters conditioners in private pools
- Meters belt lubricants in bottling machines
- Meters cleaning agents in dishwashers

Dimensional drawing of DULCO®flex DF2a

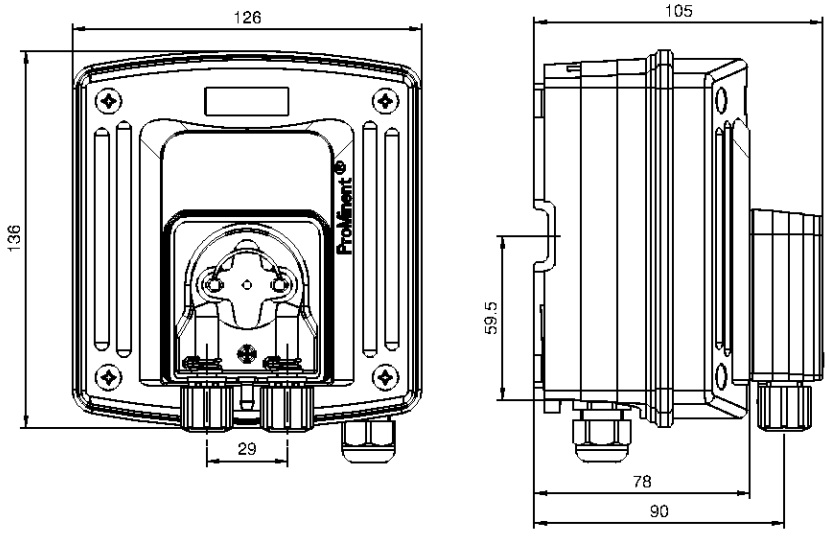

P_DX_0051_SW3

Dimensional drawing of DULCO®flex DF2a - dimensions in mm

1.7 Peristaltic Pumps DULCO®flex

1.7.2 Identity Code Ordering System

DULCO®flex product range, version DF2a

DF2a	Type	Capacity bar	Capacity l/h	Hose material	Version	Hydraulic connectors	Power supply	Cable and plug	Drive	Installation	Accessories
	0204	1.5	0.4								
	0208	1.5	0.8								
	0216	1.5	1.6								
	0224	1.5	2.4								
		Hose material									
		P		PharMed®							
		V		Viton® for fragrances (special version)							
				Version							
				0	With ProMinent® logo						
				1	Without ProMinent® logo						
					Hydraulic connectors						
					0	Connector for hose 6/4 mm suction and discharge side					
					9	Connector for hose 10/4 mm discharge side only					
						Power supply					
						A	230 V ± 10%, 50/60 Hz				
							Cable and plug				
							0	No mains lead			
							1	With 2 m mains lead, open ended			
							A	With mains cable, European plug			
								Drive			
								0	Mains ON/OFF		
									Installation		
									W	Wall mounted	
										Accessories	
										0	No accessories

Viton® and PharMed® are registered trademarks.

Technical Data

Type	Capacity bar	Capacity l/h	Frequency rpm	Connector size o dia. x i dia.	Suction lift mWC	Intake head m WC
0204	1.5	0.4	5	6x4/10x4	4	3
0208	1.5	0.8	10	6x4/10x4	4	3
0216	1.5	1.6	20	6x4/10x4	4	3
0224	1.5	2.4	30	6x4/10x4	4	3

Admissible ambient temperature:	10-45 °C
Power consumption approx.:	5 W
Switching duration:	100%
Enclosure rating:	IP 65

All data refers to water at 20 °C.

Spare Hoses

	Order no.
Spare hose set, complete, PharMed®	1009480
Replacement hose compl. Viton®	1023842

1.7.3 Peristaltic Pump DULCO®flex DF3a

Provides for the perfect atmosphere in spa and wellness zones.

Capacity range 0.4 – 2.4 l/h at max. 1.5 bar back pressure

Fragrance metering in spa and wellness facilities: efficient and high-performance with the peristaltic pump DULCO®flex DF3a. They are used wherever small volumes of fragrances need to be metered.

Meters infusions in saunas, steam rooms and whirlpools. The metering pump is equipped with a time control, which can control two other peristaltic pumps for other essences. As the essences cannot be placed undiluted on the oven in saunas, the DF3a has a relay to control the dilution water. To save essences when the sauna is not in use, the pump has a contact input to which a door contact or motion detector can be connected. Essences are therefore only metered when the sauna is in use.



P_DX_0003_SW1

Your benefits

- Employees can therefore operate it quickly: It can be operated simply and reliably with language-neutral user guidance and programming via four buttons on the front
- Quietly operating, does not disturb the spa and wellness experience: Low-noise synchronous motor
- Ideal for retrofitting: Simple to integrate into existing systems
- Efficient operation by economical operation: "Meters only when needed"

Technical details

- Viton® hose material, specifically for the metering of fragrances in spa and wellness zones
- Control of dilution water by a solenoid valve
- Spring-mounted rollers for uniform roller pressure and increased service life of the hose
- Three float switch inputs

Field of application

For saunas, steam rooms and hot tubs

Dimensional drawing of DULCO®flex DF3a

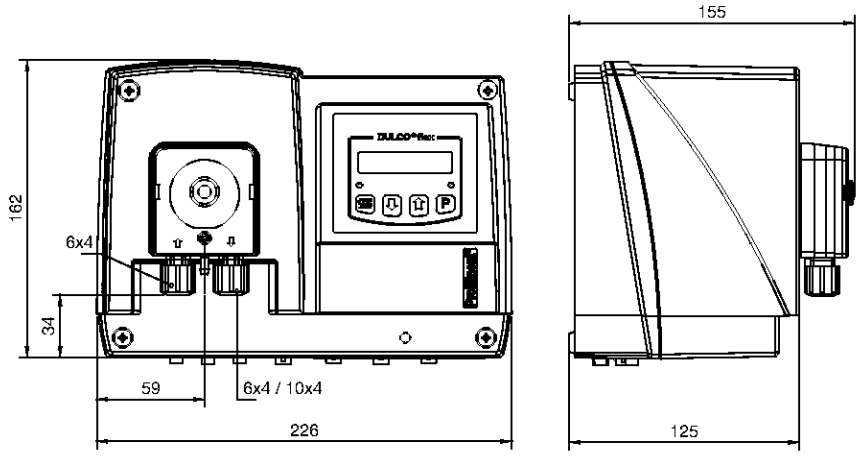

P_DX_0050_SW3

Dimensional drawing of DULCO®flex DF3a - dimensions in mm

1.7 Peristaltic Pumps DULCO®flex

1.7.4 Identity Code Ordering System

DULCO®flex product range, version DF3a

| DF3a | Application | | |

1.7.5 Peristaltic Pump DULCO®flex DF4a

The optimum pump for use in swimming pools, hot tubs and spa and wellness facilities.

Capacity range 1.5 – 12 l/h, 4 – 2 bar

The peristaltic pump DULCO®flex DF4a for metering flocculants and activated charcoal treats water precisely and accurately. It is ideal for use in swimming pools, hot tubs or spa and wellness facilities. An operating pressure up to 4 bar is possible.

There are three designs of DULCO®flex DF4a available.

1 Metering chemicals

2 Metering activated charcoal

3 Metering flocculants

This guarantees that the operating menu, inputs and outputs are always adapted to the respective application.



P_DX_0003_SW1

Your benefits

- Language-neutral user navigation
- Continuous adjustment of capacity
- Hose material in PharMed®
- Full control, as the capacity is shown in l/h in the display
- Safe and reliable operation: Flow volume and concentration can be entered reproducibly
- Long service life: Spring-loaded rollers stabilise rolling pressure and reduce wear and tear on the hose
- No irritating noise: low-noise stepper motor with ball bearing drive shaft
- Fast to use: simple installation and retrofitting, even with existing systems
- Guaranteed safety: Hose rupture monitoring system and fault indicating relay register and report all problems.
- Suitable for use around the clock – 100% switch-on time
- Operating hours counter for the peristaltic pump - always stay informed.

Technical details

- Priming function
- Night setback
- Inputs for contacts and analogue signals
- Housing degree of protection IP 65
- One or two-stage float switch input
- Operating hour counter
- CANopen interface

Field of application

Swimming pool water treatment

Dimensional drawing of DULCO®flex DF4a

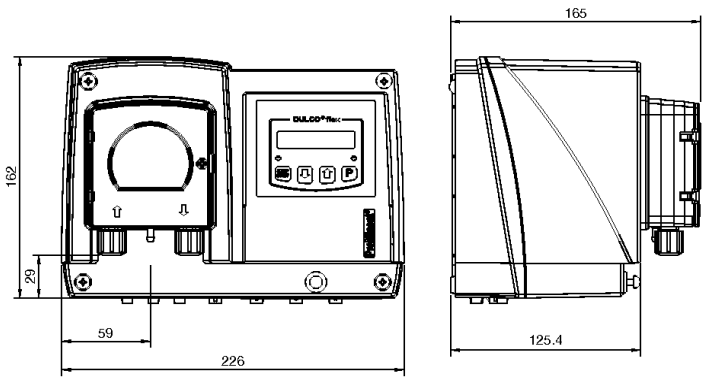

DF4a_SW3

Dimensional drawing of DULCO®flex DF4a - dimensions in mm

1.7 Peristaltic Pumps DULCO®flex

1.7.6 Identity Code Ordering System

DULCO®flex product range, version DF4a

DF4a	Application															
	0	Chemical pump														
	A	Activated charcoal metering														
	F	Flocculant metering														
		Installation														
		W	Wall mounting													
			Version													
			0	With ProMinent® logo												
			1	Without ProMinent® logo												
				Type	**Capacity**											
					bar	**l/h**										
				04004	4.0	0.35										
				04015	4.0	1.50										
				03060	2.5	6.00										
				02120	2.0	12.00										
					Hose material											
					P	PharMed®										
						Hydraulic connectors										
						0	Standard connector 6x4									
						9	Special connector 10x4 discharge side									
							Power supply									
							U	100 - 240 VAC, 50/60 Hz								
								Cable and plug								
								0	Without cable							
								1	With cable 2.0 m; open end							
								A	With cable 2.0 m; Euro connector							
								B	With cable 2.0 m; Swiss connector							
									Accessories							
									0	Without accessories						
									2	With lip-seal metering valve PCB and 10 m PE metering line						
										Hardware extension						
										0	None					
											Language default					
											00	Language-neutral				
												Relay				
												1	Fault signalling relay, drop-out action			
												3	Fault signalling relay, pick-up action			
													Control versions			
													8	manual + external contact and analogue 0/4 - 20 mA + 0 - 10 V		
													C	as "8" and CANopen		
													D	such as "8" and CANopen and CAN connector		
														Further input		
														1	Pause + 2-stage level + AUX1	
														2	Pause + 1-stage level + AUX1 + AUX2	
															Pause/level	
															0	Pause break contact + level break contact
																Approvals
																01 CE-Symbol

PharMed® is a registered trademark.

Technical Data

Priming lift	3 mWS	Approx. power consumption:	24 W
Suction lift	4 mWS	Switching duration:	100%
Speed	0 - 85 RPM	Degree of protection:	IP 65
Permissible ambient temperature:	10-45 °C		

All data refers to water at 20 °C.

Spare Hoses

	Order no.
For type 04004 PharMed®	1034997
For type 04015 PharMed®	1030722
For type 03060 PharMed®	1030723
For type 02120 PharMed®	1030774



1.8 Flow Meter DulcoFlow®

1.8.1 Flow Meter DulcoFlow®

Your reliable control unit: unobtrusively measures, monitors and detects faults.

For the measurement of pulsating volumetric flows within the range of 0.03 ml/stroke to 10 ml/stroke

The flow meter DulcoFlow® reliably measures pulsating flows in the range above 0.03 ml/stroke based on the ultrasound measuring principle. The flow meter achieves maximum chemical resistance, as all wetted parts are made of PVDF and PTFE.

NEW

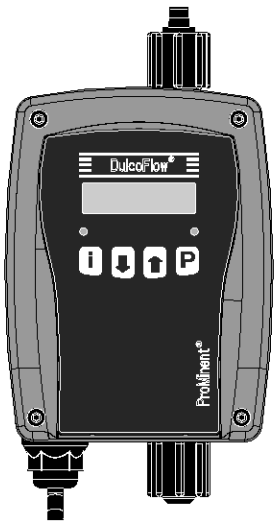

P_DFI_0002_SW1

The device works on the ultrasound measuring principle. It was developed specifically for measuring small pulsating volumetric flows. It is installed around 30 cm downstream of the metering pump, so that there is still sufficient pulsation in the flow. All liquids that conduct ultrasound waves can be measured.

Your benefits

- Maximum chemical resistance by the use of PVDF and PTFE
- No electrical conductivity of the medium is needed
- Measurement above stroke volumes of approx. 30 µl
- Detection of gas bubbles in the feed chemical
- No bottlenecks in the measuring tube. Media with small undissolved particles or with increased viscosity can be measured
- A 0/4 -20 mA current output and a frequency output are available for remote transmission of the measured values.
- Use as a single stroke monitor with feedback to the pump. This ensures that the metering stroke is performed within an adjustable lower and upper limit
- Summation of the metering volume measured with stroke counter
- Intuitive user guidance and simple programming

Technical details

- 2 LEDs for status display and stroke feedback
- 2-line graphic display
- 0/4 – 20 mA standard signal and 0 – 10 kHz frequency output for remote transmission of the measured value
- Compact, chemically-resistant plastic housing
- Measuring accuracy ±2% if the device has been calibrated to the chemical to be measured. Max. operating pressure 16 bar.

Field of application

- Measurement of the chemical consumption, for example in surface treatment
- Guaranteed metering, for example in the paper industry
- Measured value transmission and pump control by the central control system
- Measurement of aggressive chemicals
- Not suitable for liquids, which have minimal acoustic conductivity, e.g. sodium hydroxide (NaOH) with a concentration of greater than around 20%
- **We recommend first testing the measurability with emulsions and suspensions**

1.8 Flow Meter DulcoFlow®

Dimensional drawing of DulcoFlow®

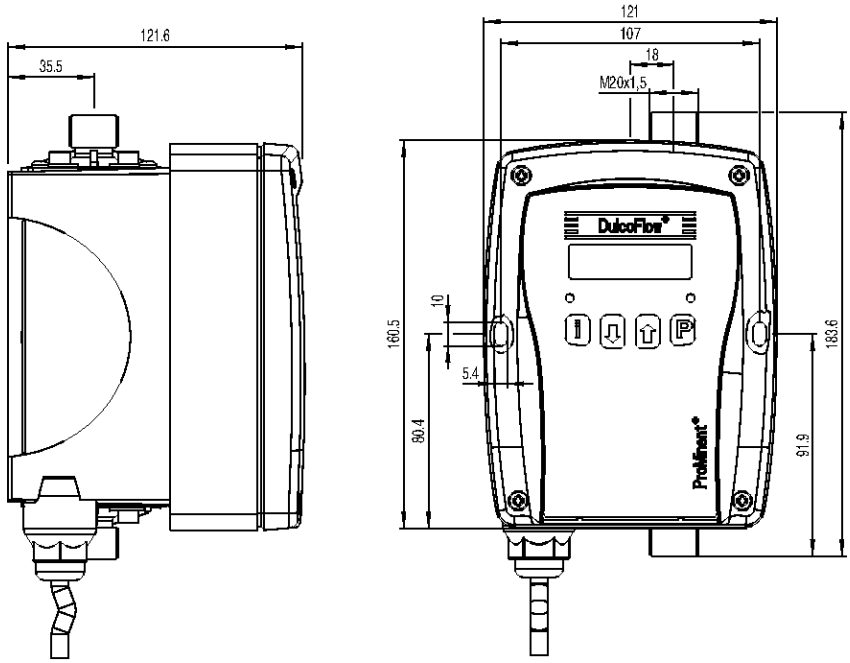

P_DFI_0003_SW_Dulcoflow_SW3

Dimensional drawing of DulcoFlow® - dimensions in mm

Technical Data

Type	Type 05	Type 08
Max. operating pressure	16 bar	16 bar
Smallest measurable stroke volume	Approx. 0.03 ml/stroke pulsing	Approx. 0.05 ml/stroke pulsing
Contact output with individual stroke detection	Open collector, 1 contact per stroke	Open collector, 1 contact per stroke
Frequency output	Open collector, up to 10 kHz at maximum flow (parametrisable)	Open collector, up to 10 kHz at maximum flow (parametrisable)
Analogue output	Parametrisable, max. load 400 Ω	Parametrisable, max. load 400 Ω
for series	Beta® 1000 – 0413/0713, gamma/ X 1602 – 0414/0715, delta® 1608 – 1612	Beta® 1604 – 0420, gamma/ X 1604 – 0424, delta® 1020 – 0450, Sigma/ 1

1.8 Flow Meter DulcoFlow®

Identity code ordering system for DulcoFlow® ultrasound flow meter

DFMa	Type (for pump series)							
	08	Beta® 1604 – 0420, gamma/ X 1604 – 0424, delta® 1020 – 0450, Sigma/ 1						
		Sealant material						
		E	EPDM					
		V	FKM					
		T	PTFE					
			Hydraulic connection					
			1	6/4 mm				
			2	8/5 mm				
			3	12/9 mm				
				Electrical connection, cable				
				A	100 - 230 V AC, 2 m European			
				B	100 - 230 V AC, 2 m Swiss			
				C	100 - 230 V AC, 2 m Australian			
				D	100 – 230 V AC, 2 m USA			
					Signal output			
					0	No output		
					1	Current output		
					2	Contact output		
					3	Current output and contact output		
					4	Current output for delta® with control module		
						Version		
						0	With ProMinent® logo	
							Accessories	
							0	Without accessories

1.9.1 Foot Valves for Low-Pressure Metering Pumps

At the end of the suction line as protection against contamination and vacuum breaker, with filter meshes and ball check. With 6/4, 8/5, 12/6, 12/9 connectors with ceramic weight.

PPE Foot Valve

PP body, EPDM seals

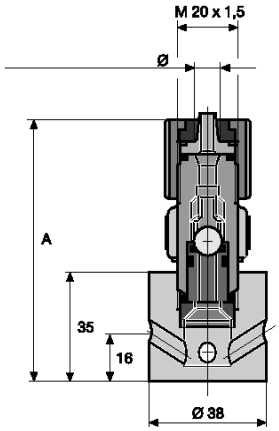

pk_1_038

Connector	oØ x iØ mm	A mm	Fig.	Order no.
6/4 for hose	6 x 4	84	pk_1_038	924558
8/5 for hose	8 x 5	84	pk_1_038	809468
12/9 for hose	12 x 9	87	pk_1_038	809470
10/4 for hose	10 x 4	87	pk_1_038	1002916
12/6 for hose	12 x 6	87	pk_1_038	809469
6/4 for hose	6 x 4	57	P_AC_0207_SW	914554
G 3/4 - DN 10 for hose	20 x 15 and 24 x 16	93	P_AC_0206_SW	809465

PPB Foot Valve

PP body, FKM (FKM) seals

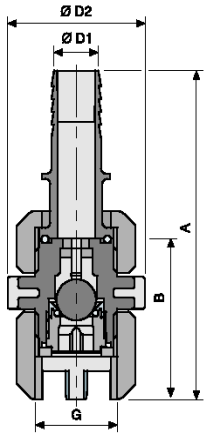

P_AC_0206_SW

Connector	oØ x iØ mm	A mm	Fig.	Order no.
6/4 for hose	6 x 4	84	pk_1_038	924559
8/5 for hose	8 x 5	84	pk_1_038	924683
12/9 for hose	12 x 9	87	pk_1_038	924684
10/4 for hose	10 x 4	87	pk_1_038	1002915
12/6 for hose	12 x 6	87	pk_1_038	924685
G 3/4 - DN 10 for hose	20 x 15 and 24 x 16	93	P_AC_0206_SW	790189

PCB Foot Valve

PVC housing, FKM seals.

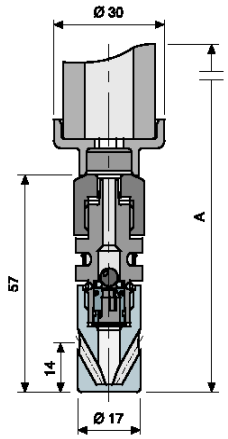

P_AC_0207_SW

Connector	oØ x iØ mm	A mm	Fig.	Order no.
6/4 for hose	6 x 4	84	pk_1_038	924557
8/5 for hose	8 x 5	84	pk_1_038	924562
12/9 for hose	12 x 9	87	pk_1_038	924564
10/4 for hose	10 x 4	87	pk_1_038	1002917
12/6 for hose	12 x 6	87	pk_1_038	924563
6/4 for hose	6 x 4	57	P_AC_0207_SW	914505
G 3/4 - DN 10 for hose	20 x 15 and 24 x 16	93	P_AC_0206_SW	809464

1.9 Hydraulic/Mechanical Installation Accessories

PVT Foot Valve

PVDF housing, PTFE seals.

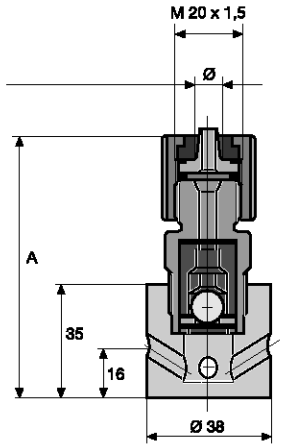

pk_1_040

Connector	oØ x iØ mm	A mm	Fig.	Order no.
6/4 for hose	6 x 4	79	pk_1_040	1024705
8/5 for hose	8 x 5	79	pk_1_040	1024706
12/9 for hose	12 x 9	82	pk_1_040	1024707
DN 10 for hose	24 x 16	92	P_AC_0206_SW	1029471

Foot Valve TTT

PTFE housing and seals, for connections 6/4, 8/5, 12/6, 12/9 with ceramic weight.

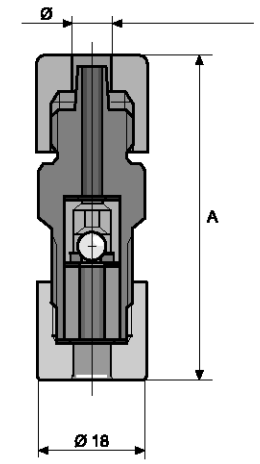

pk_1_039

Connector	oØ x iØ mm	A mm	Fig.	Order no.
6/4 for hose	6 x 4	79	pk_1_040	809455
8/5 for hose	8 x 5	79	pk_1_040	809471
12/9 for hose	12 x 9	82	pk_1_040	809473
12/6 for hose	12 x 6	82	pk_1_040	809472
6/4 for hose	6 x 4	52	pk_1_039	914349
G 3/4 - DN 10	d16 welding sleeve	93	P_AC_0202_SW	809466

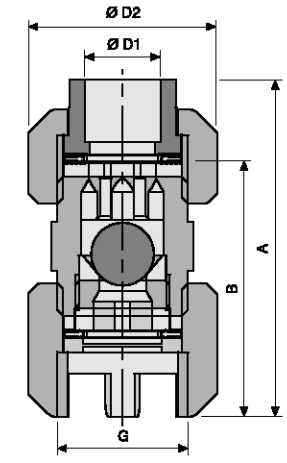

P_AC_0202_SW

1.9 Hydraulic/Mechanical Installation Accessories

Foot Valve SST

Stainless steel 1.4404 housing, PTFE seals. A support sleeve is required for tube connections 6/4, 8/5, 12/9.

Connector	oØ x iØ mm	A mm	Fig.	Order no.
6/4 for pipe 6 x 5 mm / hose	6 x 4	74	P_AC_0229_SW1	924568
8/5 for pipe 8 x 7 mm / hose	8 x 5	74	P_AC_0229_SW1	809474
12/9 for pipe 12 x 10 mm / hose	12 x 9	77	P_AC_0229_SW1	809475
1/4" NPT for SS2		70	pk_1_031_SW1	924567
G 3/4 - DN 10 with socket Rp 3/8		67	P_AC_0204_SW	809467

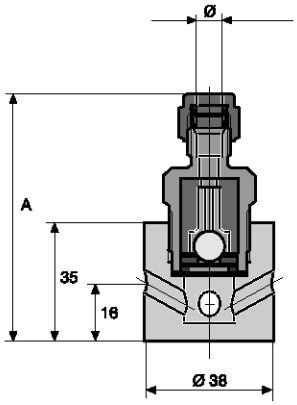

P_AC_0229_SW1

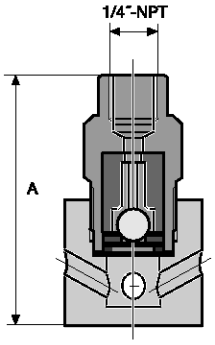

pk_1_031_SW1

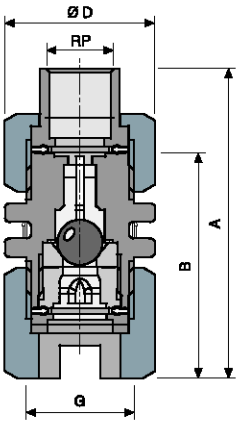

P_AC_0204_SW

1.9.2 Injection Valve for Low-Pressure Metering Pumps

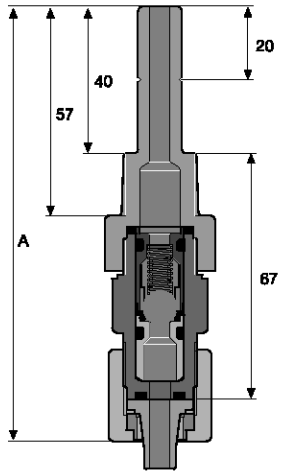

pk_1_105

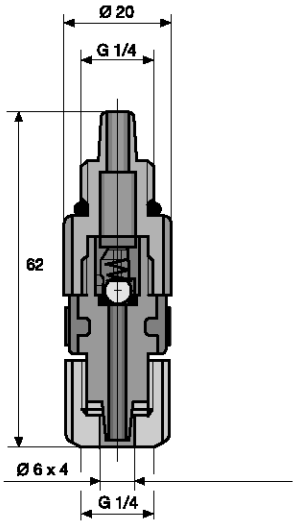

pk_1_042

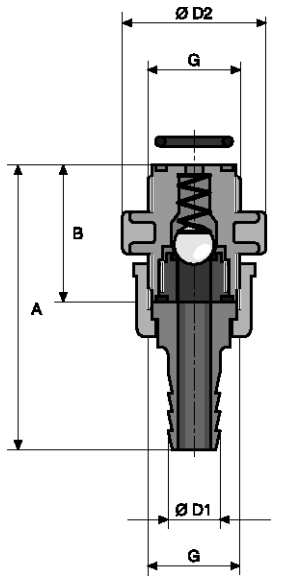

pk_2_029

Injection valves are mounted at the point of injection to connect the metering line. They protect against backflow and generate a defined back pressure.

In the PP, PVC, PVDF and stainless steel versions, the injection valve with ball check is spring-loaded with a Hastelloy C spring, priming pressure approx. 0.5 bar (with R1/4 connector, spring made of stainless steel no. 1.4571, priming pressure approx. 1 bar). They may be fitted in any position.

The TT version without a spring is suitable for vertical installation from below. Valve springs can be retrofitted.

Important: Injection valves are not absolutely leak-tight shut-off devices!

PPE Injection Valve

PP housing, EPDM seals with non-return ball, spring-loaded with Hastelloy C spring, prepressure approx. 0.5 bar with extended screwed socket.

Applications when using appropriate metering lines

25 °C - max. operating pressure 16 bar

45 °C - max. operating pressure 9 bar

Connection	oØ x iØ mm	A mm	Fig.	Order no.
6/4 - R 1/2 for PE/PTFE pipe	6 x 4	119	pk_1_105	924681
8/5 - R 1/2 for PE/PTFE pipe	8 x 5	119	pk_1_105	809476
12/9 - R 1/2 for PE/PTFE pipe	12 x 9	119	pk_1_105	809478
10/4 - R 1/2 for PVC hose	10 x 4	119	pk_1_105	1002920
12/6 - R 1/2 for PVC hose	12 x 6	119	pk_1_105	809477
6/4 - G 1/4 for PE/PTFE pipe*	6 x 4	62	pk_1_042	914184
G 3/4 - DN 10 for PVC hose	24 x 16	83	pk_2_029	809461

* Valve spring from stainless steel 1.4571, priming pressure approx. 0.8 bar

PPB Injection Valve

PP housing, FKM seals with spring-loaded non-return ball, prepressure approx. 0.5 bar.

Applications when using appropriate metering lines

25 °C - max. operating pressure 16 bar

45 °C - max. operating pressure 9 bar

Connection	oØ x iØ mm	A mm	Fig.	Order no.
6/4 - R 1/2 for PE/PTFE pipe	6 x 4	119	pk_1_105	924682
8/5 - R 1/2 for PE/PTFE pipe	8 x 5	119	pk_1_105	924687
12/9 - R 1/2 for PE/PTFE pipe	12 x 9	119	pk_1_105	924688
10/4 - R 1/2 for PVC hose	10 x 4	119	pk_1_105	1002921
12/6 - R 1/2 for PVC hose	12 x 6	119	pk_1_105	924689
G 3/4 - DN 10 for PVC hose	24 x 16	83	pk_2_029	790191

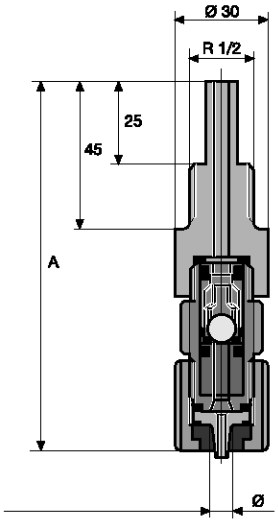

pk_1_046

PP/PTFE Injection Valve

For prevention of chemical deposits. PP body, PTFE mounting insert, EPDM seals with ball check and Hastelloy C spring approx. 0.5 bar priming pressure (Fig. pk_1_046).

Applications when using appropriate metering lines

25 °C - max. operating pressure 16 bar

45 °C - max. operating pressure 9 bar

Connection	oØ x iØ mm	A mm	Fig.	Order no.
6/4 - R 1/2 for PE/PTFE pipe	6 x 4	103	pk_1_046	924588
8/5 - R 1/2 for PE/PTFE pipe	8 x 5	103	pk_1_046	924589
12/9 - R 1/2 for PE/PTFE pipe	12 x 9	106	pk_1_046	924590
10/4 - R 1/2 for PVC hose	10 x 4	106	pk_1_046	1002923
12/6 - R 1/2 for PVC hose	12 x 6	106	pk_1_046	924591

PVC/PTFE Injection Valve

PVC body, PTFE mounting insert, FKM-B seals, spring loaded ball check with Hastelloy C spring, approx. 0.5 bar priming pressure.

Applications when using appropriate metering lines

25 °C - max. operating pressure 16 bar

45 °C - max. operating pressure 7 bar

Connector	oØ x iØ mm	Fig.	Order no.
6/4 - R 1/2 for PE/PTFE pipe	6 x 4	pk_1_046	809450
8/5 - R 1/2 for PE/PTFE pipe	8 x 5	pk_1_046	809451
12/9 - R 1/2 for PE/PTFE pipe	12 x 9	pk_1_046	809452
10/4 - R 1/2 for PVC hose	10 x 4	pk_1_046	1002924
12/6 - R 1/2 for PVC hose	12 x 6	pk_1_046	809453

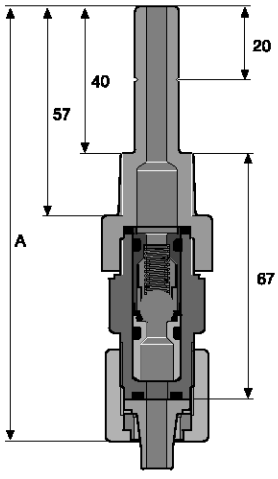

pk_1_105

PCB Injection Valve

Housing made of PVC, seals made of FKM with non-return ball spring-loaded with Hastelloy C spring, priming pressure approx. 0.5 bar, with extended screwed socket. Type 8/4 up to 25 bar.

Applications when using appropriate metering lines

25 °C - max. operating pressure 16 bar

45 °C - max. operating pressure 7 bar

Connection	oØ x iØ mm	A mm	Fig.	Order no.
6/4 - R 1/2 for PE/PTFE pipe	6 x 4	119	pk_1_105	924680
8/4 - R 1/2 for PTFE line	8 x 4	119	pk_1_105	1034621
8/5 - R 1/2 for PE/PTFE pipe	8 x 5	119	pk_1_105	924592
12/9 - R 1/2 for PE/PTFE pipe	12 x 9	119	pk_1_105	924594
10/4 - R 1/2 for PVC hose	10 x 4	119	pk_1_105	1002919
12/6 - R 1/2 for PVC hose	12 x 6	119	pk_1_105	924593
6/4 - G 1/4 for PE/PTFE pipe*	6 x 4	62	–	914559
G 3/4 - DN 10 for PVC hose	24 x 16	83	pk_2_029	809460

* Spring made of 1.4571, approx. 0.8 bar priming pressure.

1.9 Hydraulic/Mechanical Installation Accessories

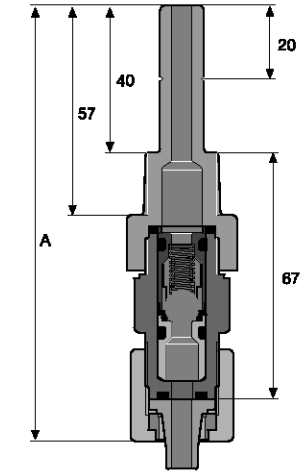

pk_1_105

PVT Injection Valve

Housing PVDF, seals PTFE, with non-return ball, spring-loaded with Hast. C spring, approx. 0.5 bar priming pressure, with extended screwed socket. Type 6/3 up to 20 bar, 8/4 up to 25 bar.

Applications when using appropriate metering lines

25 °C - max. operating pressure 16 bar

45 °C - max. operating pressure 12 bar

Connection	oØ x iØ mm	A mm	Fig.	Order no.
6/3 - R 1/2 for PTFE pipe	6 x 3	119	pk_1_105	1024713
6/4 - R 1/2 for PE/PTFE pipe	6 x 4	119	pk_1_105	1024708
8/4 - R 1/2 for PTFE line	8 x 4	119	pk_1_105	1034619
8/5 - R 1/2 for PE/PTFE pipe	8 x 5	119	pk_1_105	1024710
12/9 - R 1/2 for PE/PTFE pipe	12 x 9	119	pk_1_105	1024711
10/4 - R 1/2 for PVC hose	10 x 4	119	pk_1_105	1024709
12/6 - R 1/2 for PVC hose	12 x 6	119	pk_1_105	1024712
G 3/4 - DN 10 with pressure hose nozzle d16 - DN 10.	24 x 16	84	pk_2_029	1029476

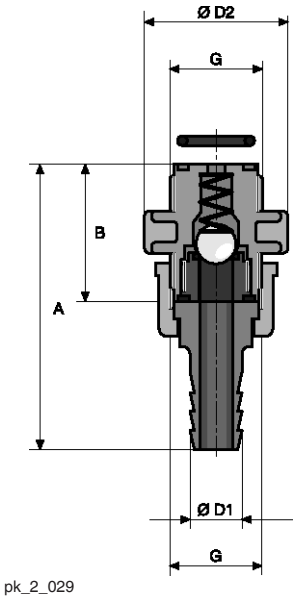

pk_2_029

PVT Injection Valve with Tantalum Spring

PVDF housing, PTFE seals with tantalum spring-loaded ball check, priming pressure approx. 0.5 bar, with extra-long screw-in fitting. 6/3 version up to 20 bar, 8/4 up to 25 bar, for metering of sodium-calcium hypochlorite, with universal tube connector set 6x3, 6x4, 8x4, 8x5, 12x9, 10x4 and 12x6 mm.

Application range when using appropriate metering line

25 °C - max. operating pressure 16 bar

45 °C - max. operating pressure 12 bar

Connection	A mm	Fig.	Order no.
Universal connector, R 1/2	119	pk_1_105	1044653

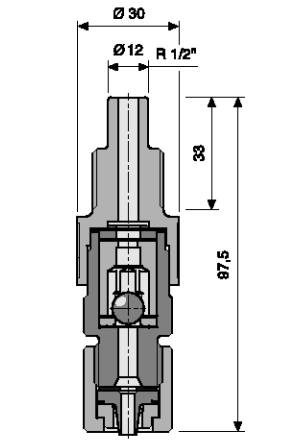

P_AC_0184_SW

TTT Injection Valve

Vertical installation from below. With ball check, without spring. Valve spring (Order No. 469404) can be retrofitted. Body and seals made of PTFE.

Applications when using appropriate metering lines

25 °C - max. operating pressure 10 bar

45 °C - max. operating pressure 5 bar

Connection	oØ x iØ mm	A mm	Fig.	Order no.
6/4 - R 1/2 for PE/PTFE pipe	6 x 4	98	P_AC_0184_SW	809488
8/5 - R 1/2 for PE/PTFE pipe	8 x 5	98	P_AC_0184_SW	809479
12/9 - R 1/2 for PE/PTFE pipe	12 x 9	101	P_AC_0184_SW	809481
12/6 - R 1/2 for PVC hose	12 x 6	101	P_AC_0184_SW	809480
G 3/4 - DN 10 with d16 welding sleeve		–	pk_2_030	809462



1.9 Hydraulic/Mechanical Installation Accessories

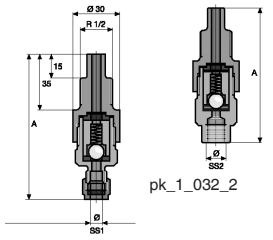

pk_1_032_1

pk_1_032_2

SST Injection Valve

Stainless steel 1.4404 body and PTFE seals with spring loaded ball check. Spring made of Hastelloy C. with approx. 0.5 bar priming pressure, for 1.4571 R 1/4 spring, approx. 1 bar priming pressure. Ferrule is required for connection with PE/PTFE pipe.

Applications when using appropriate metering lines

25 °C - max. operating pressure 30 bar

45 °C - max. operating pressure 30 bar

Connection	oØ x iØ mm	A mm	Fig.	Order no.
6 mm - R 1/2 for pipe	6 x 5	93	pk_1_032_1	809489
8 mm - R 1/2 for pipe	8 x 7	93	pk_1_032_1	809482
12 mm - R 1/2 for pipe	12 x 10	96	pk_1_032_1	809483
1/4" NPT - R 1/2 for pipe	R 1/4" NPT	89	pk_1_032_2	924597
6 mm - R 1/4 for pipe		–	P_AC_0253_SW	914588
G 3/4 - DN 10, sleeve	Rp 3/8	–	pk_2_030	809463

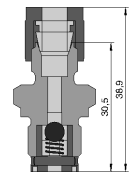

P_AC_0253_SW

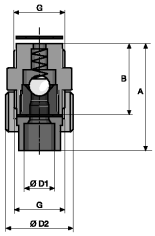

pk_2_030

PPB Injection Valve O-Ring Loaded

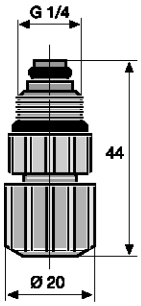

PP body, FKM seals. Priming pressure approx. 0.5 bar.

Applications when using appropriate metering lines

25 °C - max. operating pressure 16 bar

45 °C - max. operating pressure 9 bar

Connector	oØ x iØ mm	Fig.	Order no.
6/4 - G 1/4 short	6 x 4	P_AC_0008_SW	914754
6/4 - G 1/4 long	6 x 4	P_AC_0009_SW	741193

P_AC_0008_SW

PCB Injection Valve O-Ring Loaded

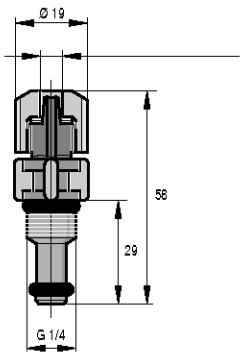

PVC body, FKM seals, priming pressure approx. 0.5 bar.

Applications when using appropriate metering lines

25 °C - max. operating pressure 16 bar

45 °C - max. operating pressure 7 bar

Connector	oØ x iØ mm	Fig.	Order no.
6/4 - G 1/4 short	6 x 4	P_AC_0008_SW	914558
6/4 - G 1/4 long	6 x 4	P_AC_0009_SW	915091

P_AC_0009_SW

1.9 Hydraulic/Mechanical Installation Accessories

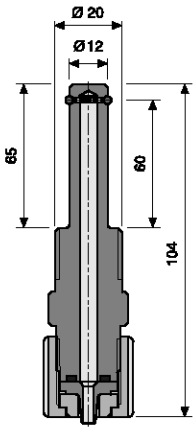

P_AC_0183_SW

PTFE Injection Valve O-Ring Loaded

PTFE housing, FKM seals.

Applications when using appropriate metering lines

25 °C - max. operating pressure 10 bar

45 °C - max. operating pressure 6 bar

Connection	oØ x iØ mm	A mm	Fig.	Order no.
6/4 – for PE/PTFE line	6 x 4	104	P_AC_0183_SW	809484
8/5 – for PE/PTFE line	8 x 5	104	P_AC_0183_SW	809485
10/4 – for PVC hose	10 x 4	104	P_AC_0183_SW	1002925
12/6 – for PVC hose	12 x 6	104	P_AC_0183_SW	809487
12/9 – for PE/PTFE line	12 x 9	104	P_AC_0183_SW	809486

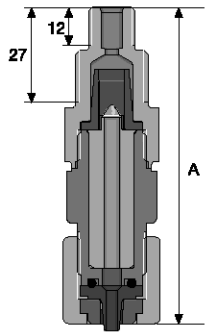

pk_1_070

Lip Seal Injection Valve PCB

Body PVC, seals FKM, inlet pressure approx. 0.05 bar. For metering sodium hypochlorite and for use in conjunction with the peristaltic pump DF2a.

Applications when using appropriate metering lines

25 °C - max. operating pressure 2 bar

45 °C - max. operating pressure 2 bar

Connection	oØ x iØ mm	A mm	Fig.	Order no.
6/4 - R 1/2 - 1/4 for PE/PTFE pipe	6 x 4	90	pk_1_070	1019953
10/4 - R 1/2 - 1/4 for PE/PTFE pipe	10 x 4	90	pk_1_070	1024697

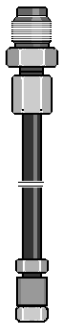

pk_1_049

Metering Connector for Warm Water up to 200 °C

Consists of stainless steel 1.4404 injection valve, 1 m stainless steel 1.4571 discharge line and threaded connector with reinforcing sleeve for connection of PE/PTFE pipe to stainless steel pipe.

Max. operating pressure 30 bar

Connection	Fig.	Order no.
Warm water 6 mm - R 1/4	pk_1_049	913166
Warm water 6 mm - R 1/2	pk_1_049	913167
Warm water 8 mm - R 1/2	pk_1_049	913177
Warm water 12 mm - R 1/2	pk_1_049	913188



1.9.3 Injection Lances, Non-Return Valves for Low-Pressure Metering Pumps

PPE Injection Lance

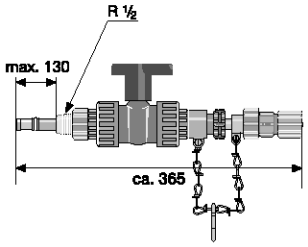

pk_1_007

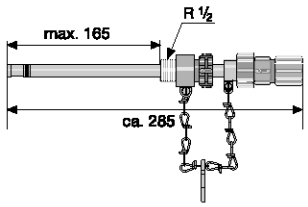

pk_1_062

For immersion depths of 20 - 165 mm, in large diameter pipe to prevent chemical deposition at the point of injection. Consists of spring-loaded metering valve, Hastelloy C spring, ceramic ball, adjustable immersion rod and hose valve. With connectors for all hose sizes used with solenoid metering pumps: 6/4, 8/5, 12/9, 10/4 and 12/6.

Type	Seal material	Max. pressure at 25 °C bar	Fig.	Order no.
PPE without stopcock	EPDM/silicone	6	pk_1_062	1021530
PPE with stopcock	EPDM/silicone	6	pk_1_007	1021531
PCB without stopcock	FKM/silicone*	6	pk_1_062	1021528
PCB with stopcock	FKM/silicone*	6	pk_1_007	1021529

* **Please note:** The product contains connections bonded with Tangit. Always note the durability of Tangit adhesive.

Short Injection Lance

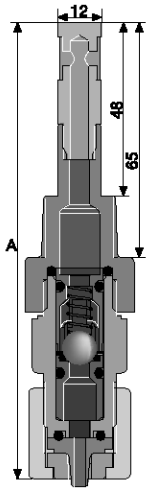

P_AC_0020_SW

Metering lance with universal connection kit, enabling the connection of different hose sizes of from 6/4 to 12/9. Hastelloy C spring, ceramic ball and silicone hose. Material of screwed socket: PVDF.

Type	Material, valve body	Max. pressure at 25 °C bar	Seal material	A mm	Fig.	Order no.
PPE	PP	16	EPDM	126	P_AC_0020_SW	1028383
PCB	PVC	16	FKM-B	126	P_AC_0020_SW	1028363
PVT	PVDF	16	PTFE	126	P_AC_0020_SW	1028081

PVDF Non-Return Valve for Hose Installation

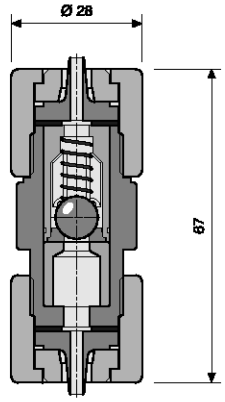

P_AC_0181_SW

With connection kit on both sides for fitting in hose line.

With non-return ball, spring-loaded with Hastelloy C spring, prepressure approx. 0.5 bar.

PVDF housing, PTFE seals.

Different hose sizes from 6/4 to 12/9 can be joined using different connection kits.

Applications when using appropriate metering lines

25 °C - max. operating pressure 16 bar

45 °C - max. operating pressure 12 bar

Connection	oØ x iØ mm	A mm	Fig.	Order no.
6/4 for PE/PTFE line	6 x 4	67	P_AC_0181_SW	1030463
8/5 for PE/PTFE line	8 x 5	67	P_AC_0181_SW	1030975
10/4 for PE/PTFE line	10 x 4	67	P_AC_0181_SW	1030977
12/6 for PVC hose	12 x 6	67	P_AC_0181_SW	1030978
12/9 for PE/PTFE line	12 x 9	67	P_AC_0181_SW	1030976

1.9.4 Back Pressure Valves / Relief Valves for Low-Pressure Metering Pumps

Back pressure valves are used to generate a constant back pressure to ensure precise metering and protect against over-metering or metering imprecision through free outlets and priming pressure on the suction side. They are also used in conjunction with pulsation dampers to generate low-pulsation metering. We recommend back pressure valves type DHV-RM with fluctuating back pressure and metering into vacuums.

(Back Pressure Valves / Relief Valves for Motor Driven Metering Pumps see volume "Motor-driven and process metering pumps for all capacity ranges" page → 1-64)

The DHV listed below are designed for different applications. Please note the relevant notes for the different mountings.

Important: Back pressure valves cannot be used as absolutely leak-tight shut-off devices. Take appropriate precautions when handling hazardous media.

Relief valves are used to protect pumps, pipes and fittings from over pressure, in the event of incorrect operation or blockages in the bypass. In the event of a malfunction, the pump pumps back into the storage tank.

Multifunctional Valve Type MFV-DK, PVDF

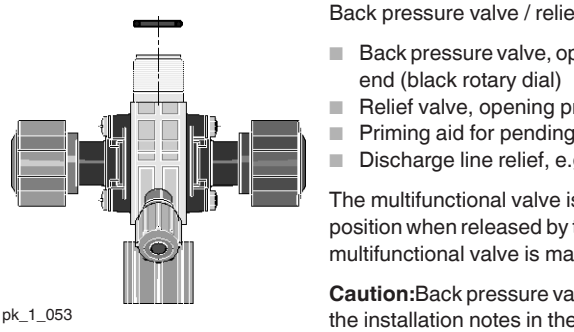

pk_1_053

Back pressure valve / relief valve for fitting directly on the pump's dosing head with the functions:

- Back pressure valve, opening pressure approx. 1.5 bar with free outlet or priming pressure at the suction end (black rotary dial)
- Relief valve, opening pressure approx. 6, 10 or 16 bar (red rotary dial)
- Priming aid for pending back pressure, no need to release discharge line
- Discharge line relief, e.g. prior to service work

The multifunctional valve is operated by free-moving rotary dials that automatically return to their original position when released by the operator. This means operation is possible even when access is difficult. The multifunctional valve is made of PVDF and can be used to meter almost any chemical.

Caution: Back pressure valves are not absolutely leak-tight shut-off devices! It is essential that you observe the installation notes in the operating instructions!

Caution: The bypass line should always be connected.

For hoses see page → 1-57.

Valve body	PVDF
Diaphragm	PTFE- coated
Seal	FKM and EPDM (enclosed)

Type	Relief opening pressure*	Connection	Bypass connector	Order no.
Size I	16 bar	6-12	6/4	792011
Size I	10 bar	6-12	6/4	791715
Size I	6 bar	6-12	6/4	1005745
Size II	10 bar	6-12	12/9	792203
Size II	6 bar	6-12	12/9	740427
Size III	10 bar	DN 10	12/9	792215

* The relief opening pressure given above is the pressure at which the valve begins to open. The pressure can be up to 50% higher until the valve is fully open depending on the type of pump.

Application: multifunctional valves

Size I	ALPc 1001, 1002, 1004, 1008, 0708
	Beta®, gamma/ L type 1000, 1601, 1602, 1604, 1605, 1005, 1008, 0708, 0413, 0220
	gamma/ X type 1602, 1604, 1009, 0708, 0414, 0220
	delta® type 1608, 1612
Size II	ALPc 0417, 0230
	Beta®, gamma/ L type 1605, 1008, 0713, 0420, 0232
	gamma/ X type 1009, 0715, 0424, 0245
	delta® type 1020, 0730
Size III	delta® type 0450, 0280

For material design PP, PV, NP, TT

1.9 Hydraulic/Mechanical Installation Accessories

Back Pressure Valve Type DHV-S-DK, 0-10 bar Adjustable



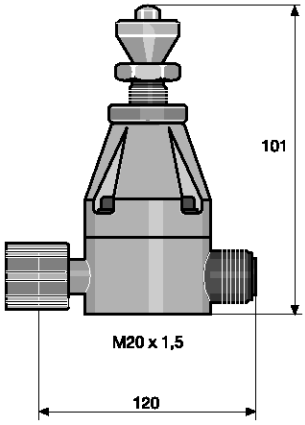

pk_1_129

Adjustable back pressure valve for fitting directly onto the dosing head to generate a constant back pressure. For accurate metering with a free outlet and with priming pressure on the suction side.

Caution: Back pressure valves are not absolutely leak-tight shut-off devices! It is essential that you observe the installation notes in the operating instructions!

Applications: Metering pump alpha, Beta®, gamma/ X, Pneumados b, EXtronic® and delta®

Type	Adjustable pressure	Connection	Material	Order no.
DHV-S-DK	0 – 10 bar	6 to 12 mm	PP/EPDM	302320
DHV-S-DK	0 – 10 bar	6 to 12 mm	PC/FKM*	302321
DHV-S-DK	0 – 10 bar	6 to 12 mm	TT/PTFE	302322
DHV-S-DK	0 – 10 bar	6 mm	SS	1003793
DHV-S-DK	0 – 10 bar	8 mm	SS	1003795
DHV-S-DK	0 – 10 bar	12 mm	SS	1003797

* **Caution:** The product contains adhesive joints with Tangit. Please note the resistance of Tangit adhesive.

Back Pressure Valve / Relief Valve Type DHV-S-DL, 0-10 bar Adjustable



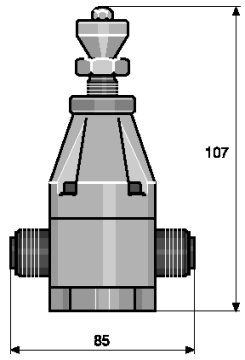

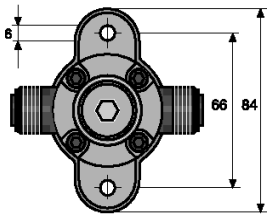

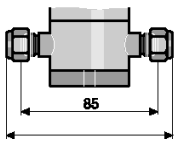

pk_1_054

Adjustable back pressure valve for installation in the metering line to generate a constant back pressure for precise metering with a free outlet and with priming pressure on the suction side

When used as a back pressure valve in long lines to avoid resonance vibrations: Install at the end of the metering line or select a set pressure greater than the line pressure loss

Only use in conjunction with pulsation damper with a free outlet and short metering line. Use type DHV-U for use with a pulsation damper at back pressure or long lines.

Caution: Back pressure valves are not absolutely leak-tight shut-off devices! It is essential that you observe the installation notes in the operating instructions!

Applications: Metering pumps alpha, Beta® , gamma/ X, Pneumados b, EXtronic® and delta®

(Back Pressure Valves / Relief Valves for Motor Driven Metering Pumps see volume "Motor-driven and process metering pumps for all capacity ranges" page → 1-64)

Type	Adjustable pressure	Connection	Material	Order no.
DHV-S-DL	0 – 10 bar	6 to 12 mm	PP	302323
DHV-S-DL	0 – 10 bar	6 to 12 mm	PC/FKM*	302324
DHV-S-DL	0 – 10 bar	6 to 12 mm	TT	302325
DHV-S-DL	0 – 10 bar	6 mm	SS	302326
DHV-S-DL	0 – 10 bar	8 mm	SS	302327
DHV-S-DL	0 – 10 bar	12 mm	SS	302328

Order 2 connecting kits in the required hose size separately for the connection.

* **Please note:** The product contains connections bonded with Tangit. Always note the durability of Tangit adhesive.

(Connection Kits for Low-Pressure Metering Pumps see page → 1-75)

1.9 Hydraulic/Mechanical Installation Accessories

Pipe Nipples

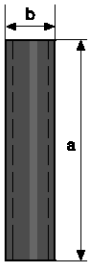

pk_1_017

For the direct connection of the pressure maintenance valve DHV-S-DL in stainless steel (SS) to the liquid end.

Type	A mm	B mm	Fig.	Order no.
1.4571 pipe nipple	6	40	pk_1_017	818537
	8	40	pk_1_017	818538
	12	40	pk_1_017	818539

Back Pressure Valve Type BPV-DM



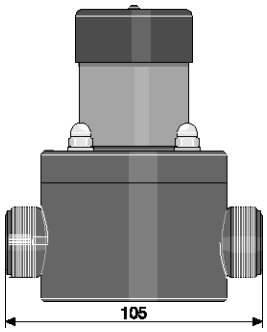

pk_1_101

Adjustable back pressure valve for installation in the metering line to generate a constant back pressure and/or for precise metering with a free outlet and with priming pressure on the suction side.

Caution: Back pressure valves are not absolutely leak-tight shut-off devices! It is essential that you observe the installation notes in the operating instructions!

Applications: Metering pumps alpha, Beta®, gamma/ X, Pneumados b and delta®

Type	Adjustable pressure	Connection	Material	Order no.
BPV-DM	1 – 10 bar	6 – 12	PP/EPDM	1009884
BPV-DM	1 – 10 bar	6 – 12	PP/FKM-B	1009886
BPV-DM	1 – 10 bar	6 – 12	PVC/EPDM	1009885
BPV-DM	1 – 10 bar	6 – 12	PVC/FKM-B	1026450

* Order 2 connection kits in the required hose size separately for the connection.

(Connector Kits see page → 1-75)

Relief Valve Type BPV-SM



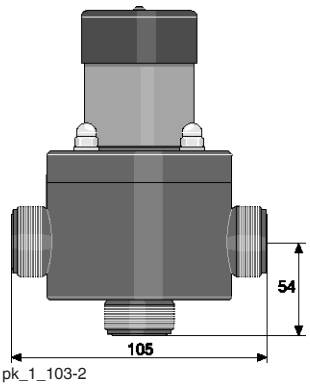

pk_1_103-2

Adjustable relief valve for installation in the metering line to protect against overpressure. With additional connector for the relief line at the base of the valve body, no T-piece is required for installation.

Caution: Back pressure valves are not absolutely leak-tight shut-off devices! It is essential that you observe the installation notes in the operating instructions!

Applications: Metering pumps alpha, Beta®, gamma/ X, Pneumados b and delta®

Type	Adjustable pressure	Connection	Material	Order no.
BPV-SM	1 – 10 bar	6 – 12	PPE	1009887
BPV-SM	1 – 10 bar	6 – 12	PPB	1009889
BPV-SM	1 – 10 bar	6 – 12	PCE	1009888
BPV-SM	1 – 10 bar	6 – 12	PCB	1026445

* Order 3 connection kits in the required hose size separately for the connection.

(Connector Kits see page → 1-75)



1.9 Hydraulic/Mechanical Installation Accessories

1.9.5 Flushing Assemblies and Overload Protection Assemblies for Low-Pressure Metering Pumps

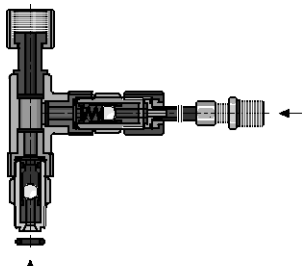

pk_1_056

Flushing Assembly

For flushing and cleaning dosing heads, metering lines and injection valves.

As a manual or automatic, time-controlled design. Installation, even retrospectively, on the suction connector of the metering pump. Supplied with 2 m flushing pipe and R 3/8 connection nipple.

Automatic flushing equipment for the fully automatic flushing of the pump head is possible on request.

PPE Flushing Assembly

PP material, EPDM seal.

	Fig.	Order no.
For 6/4, 8/5, 12/6, 12/9 connectors	pk_1_056	809909
For G 3/4 -DN 10 connector	pk_1_057	809917
For G 1 -DN 15 connector	pk_1_057	809919

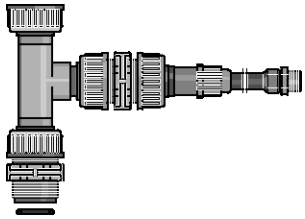

pk_1_057

PCB Flushing Assembly

Material: PVC, FKM seals

	Fig.	Order no.
for 6/4, 8/5, 12/6, 12/9 connectors	pk_1_056	809925
for G 3/4 - DN 10 connectors	pk_1_057	809926
for G 1 - DN 15 connectors	pk_1_057	803960

*** Caution:** The product contains adhesive joints with Tangit. Please note the resistance of Tangit adhesive.

Relief Valve Assembly

Consisting of a back pressure valve, which can be set from 1 - 10 bar, type DL, complete with connecting parts, installation directly on the dosing head.

Connector size 6 - 12 mm, depending on the pressure connector on the metering pump.

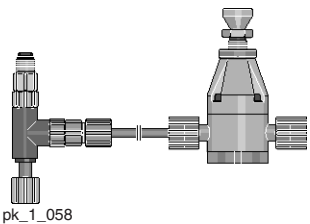

pk_1_058

PPE Relief Valve Assembly

Material: PP, EPDM seals.

	Fig.	Order no.
For 6/4, 8/5, 12/6, 12/9 connectors	pk_1_058	809990
G 3/4 - DN 10 connector	pk_1_059	809991
G 1 - DN 15 connector	pk_1_059	809992

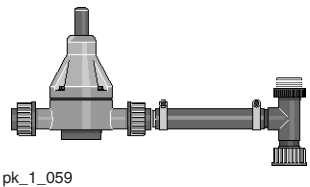

pk_1_059

PCB Relief Valve Assembly

Material: PVC, FKM seals.

	Fig.	Order no.
for 6/4, 8/5, 12/6, 12/9 connectors	pk_1_058	809989
for G 3/4 - DN 10 connectors	pk_1_059	809993
for G 1 - DN 15 connectors	pk_1_059	914745

*** Caution:** The product contains adhesive joints with Tangit. Please note the resistance of Tangit adhesive.

1.9.6 Hoses, Pipes

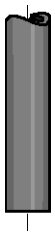

pk_1_013

Hoses and Pipework for Low-Pressure Metering Pumps

For metering pumps and accessories.

We recommend that only original lines are used so that the mechanical connection of the compression fitting and the pressure rating and chemical resistance are ensured.

Soft PVC Suction Line

Material	Length m	oØ x iØ mm	Permissible pressure bar	Order no.
PVC flexible	5	6 x 4	0.5*	1004520
	5	8 x 5	0.5*	1004521
	5	12 x 9	0.5*	1004522
	10	6 x 4	0.5*	1004523
	10	8 x 5	0.5*	1004524
	10	12 x 9	0.5*	1004525
	25	6 x 4	0.5*	1004526
	25	8 x 5	0.5*	1004527
	25	12 x 9	0.5*	1004528
	50	6 x 4	0.5*	1004529
	50	8 x 5	0.5*	1004530
	50	12 x 9	0.5*	1004531
	Sold in metres	19 x 15	0.5*	037020

* Admissible operating pressure at 20 °C in accordance with DIN EN ISO 7751, subject to chemical resistance and correct assembly.

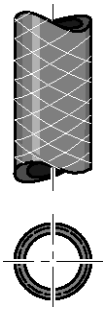

pk_1_060

Soft PVC Suction and Discharge Line with Woven Fabric Core

Material	Length m	oØ x iØ mm	Permissible pressure bar	Order no.
Fabric-reinforced flexible PVC	5	10 x 4	18*	1004533
	5	12 x 6	17*	1004538
	10	10 x 4	18*	1004534
	10	12 x 6	17*	1004539
	25	10 x 4	18*	1004535
	25	12 x 6	17*	1004540
	50	10 x 4	18*	1004536
	50	12 x 6	17*	1004541
	Sold in metres	24 x 16	10*	037040
	Sold in metres	27 x 19	10*	037041

* Admissible operating pressure at 20 °C in accordance with DIN EN ISO 7751, subject to chemical resistance and correct assembly.

Soft PVC Suction and Metering Line with Woven Inner Layer Approved for Food Use

Material	Length m	oØ x iØ mm	Permissible pressure bar	Order no.
Soft PVC with woven inner layer approved for food use	5	10 x 4	10*	1037556
	5	12 x 6	10*	1037561
	10	10 x 4	10*	1037557
	10	12 x 6	10*	1037562
	25	10 x 4	10*	1037558
	25	12 x 6	10*	1037563
	50	10 x 4	10*	1037559
	50	12 x 6	10*	1037564

* Permissible operating pressure at 20 °C as per DIN EN ISO 7751, 1/4 of burst pressure, subject to chemical resistance and correct connection

With socket-welded and PVC-bonded rigid PP and PVDF piping, pipes and fittings of pressure rating PN 16 or PN 10 bar should be used.

Please note:

PVC soft hoses do not offer the same resistance as rigid PVC. Always note the resistance of soft PVC and the cleaning instructions for use in food applications (see website).

1.9 Hydraulic/Mechanical Installation Accessories

PE Suction and Discharge Line

Material	Length m	oØ x iØ mm	Permissible pressure bar	Order no.
Polyethylene	5	6 x 4	10*	1004492
	5	8 x 5	10*	1004493
	5	12 x 9	7*	1004504
	10	6 x 4	10*	1004505
	10	8 x 5	10*	1004506
	10	12 x 9	7*	1004507
	25	6 x 4	10*	1004508
	25	8 x 5	10*	1004509
	25	12 x 9	7*	1004510
	50	6 x 4	10*	1004511
	50	8 x 5	10*	1004512
	50	12 x 9	7*	1004513

* Admissible operating pressure at 20 °C in accordance with DIN EN ISO 7751, subject to chemical resistance and correct assembly

PTFE Suction and Discharge Lines

Material	Length m	oØ x iØ mm	Permissible pressure bar	Order no.
PTFE	Sold in metres	1.75 x 1.15	12*	037414
	Sold in metres	3.2 x 2.4	8*	037415
	Sold in metres	6 x 3	20*	1021353
	Sold in metres	6 x 4	14*	037426
	Sold in metres	8 x 4	25*	1033166
	Sold in metres	8 x 5	16*	037427
	Sold in metres	12 x 9	10*	037428
	Meterage, max. 30 m	19 x 16	6*	037430

* Admissible operating pressure at 20 °C in accordance with DIN EN ISO 7751, subject to chemical resistance and correct assembly

Stainless Steel Pipes

Material	Length m	oØ x iØ mm	Permissible pressure bar	Order no.
Stainless steel pipe 1.4435	Sold in metres	1.58 x 0.9	400*	1020774
	Sold in metres	3.175 x 1.5	400*	1020775
	Sold in metres	6 x 5	175*	015738
	Sold in metres	6 x 4	185*	015739
	Sold in metres	8 x 7	160*	015740
	Sold in metres	12 x 10	200*	015743

* Admissible operating pressure at 20 °C in accordance with DIN EN ISO 7751, subject to chemical resistance and correct assembly

Hose Cutting Kit

Hose Cutting Set for Plastic Pipes up to a Diameter of 25 mm. Manufacturer: Gedore.

	Order no.
Hose Cutting Kit	1038571



1.9.7 Pressure Accumulator

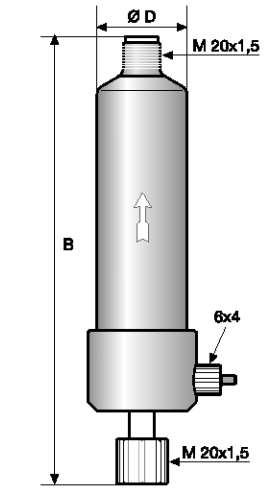

pk_1_006

PP Pressure Accumulator

Please note: Only use pulsation dampers in conjunction with an overflow device with adjustable back pressure / relief valve.

With this: Wall bracket for accumulator available in PP and PVC, consisting of pipe clamp, mounting plate and connecting nipple.

Operating range

20 °C - max. operating pressure 10 bar

40 °C - max. operating pressure 6 bar

	Volume l	Permissible stroke volume ml	Connection	Fig.	Order no.
Size 0*	0.15	1.0	M 20 x 1,5	pk_1_006	1021157
Size I	0.35	2.5	DN 8	pk_1_065	243218
Size II	1.00	5.0	G 3/4 – DN 10	pk_1_065	243219
Size II	1.00	5.0	G 1 – DN 15	pk_1_065	243220

* With bleed valve. Install directly at the pressure connector.

	Connection	A	B	Ø D
Size 0	M 20 x 1.5	-	225	49
Size I	DN 8	150	170	75
Size II	DN 10	192	220	110
Size II	DN 15	200	220	110

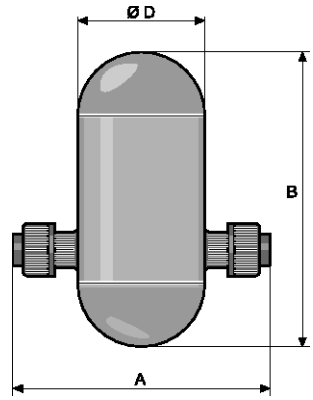

pk_1_065

PVC Pressure Accumulator

Please note: Only use pulsation dampers in conjunction with an overflow device with adjustable back pressure / relief valve.

With this: Wall bracket for accumulator available in PP and PVC, consisting of pipe clamp, mounting plate and connecting nipple.

Operating range

20 °C - max. operating pressure 10 bar

40 °C - max. operating pressure 6 bar

	Volume l	Permissible stroke volume ml	Connection	Fig.	Order no.
Size 0*	0.15	1.0	M 20 x 1,5	pk_1_006	1021120
Size I	0.35	2.5	DN 8	pk_1_065	243203
Size II	1.00	5.0	G 3/4 – DN 10	pk_1_065	243204
Size II	1.00	5.0	G 1 – DN 15	pk_1_065	243205

*** Caution:** The product contains adhesive joints with Tangit. Please note the resistance of Tangit adhesive.

* With ventilation valve. Mounted directly on the pressure connector.

	Connection	A	B	Ø D
Size 0	M 20 x 1.5	-	225	49
Size I	DN 8	150	170	75
Size II	DN 10	192	220	110
Size II	DN 15	200	220	110

1.9 Hydraulic/Mechanical Installation Accessories

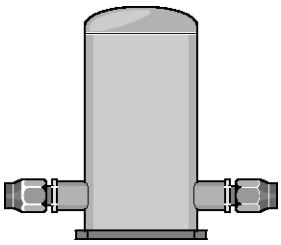

pk_1_128

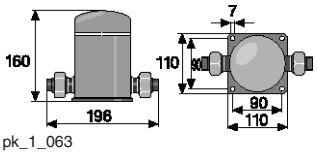

pk_1_063

Stainless Steel Accumulator

Max. operating pressure 10 bar.

	Volume l	Permissible stroke volume ml	Connection	Fig.	Order no.
Size 0	0.15	2.5	for pipe oØ 6	pk_1_128	914510
Size I	0.35	2.5	for pipe oØ 8	pk_1_128	914511
Size I	1.00	2.5	for pipe oØ 12	pk_1_128	914512
Size II*	1.00	5.0	G 3/4 – DN 10	pk_1_063	914756

* Threaded sleeve insert G 3/8.

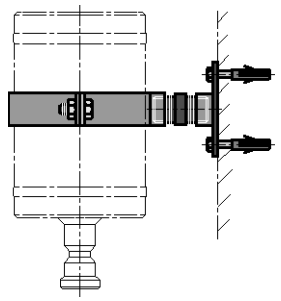

pk_1_061

Wall Mounting for Accumulator

For PP and PVC versions, consisting of clamping ring, mounting plate and connecting nipple.

			Order no.
For size I accumulator - 0.35 l	0,35 l	Ø 75	818501
For size II accumulator - 1l	1 l	Ø 110	818502

1.9.8 Pulsation Damper for Low-Pressure Metering Pumps

Pulsation dampers are available in different versions: as in-line dampers and as accumulators.

Pulsation dampers are used for low-pulsation metering and to reduce the flow resistance with long metering lines. They are also ideally suited to viscous media. The gas cushion between the housing and hose is compressed when the metering pump has a pressure stroke, at the same time as a partial volume of the medium is metered into the metering line. The overpressure that forms in the gas cushion causes the compressed volume to be transported on at the following suction stroke and the original, relaxed volume of gas is present again

Important:
Protect the pulsation dampers in principle with a relief valve.

PP In-Line Damper

Please note: Only use pulsation dampers in conjunction with an overflow device with adjustable back pressure / relief valve.

With this: Dummy plugs to seal the output side of the damper in installations with a T-piece.

Operating conditions

5 - 30 °C - max. operating pressure 10 bar
40 °C - max. operating pressure 8 bar
60 °C - max. operating pressure 4 bar

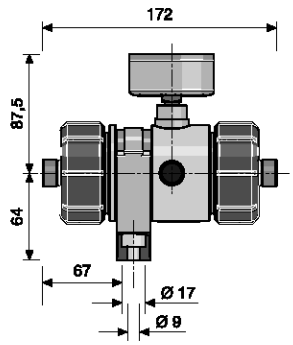

P_AC_0180_SW

	Volume l	Damper diaphragm	Seal material	Connection	Order no.
PPE in-line damper	0.05	CSM*	EPDM	M 20 x 1,5	1026768
PPB in-line damper	0.05	FKM	FKM	M 20 x 1,5	1026771
PPE in-line damper	0.05	CSM*	EPDM	G 3/4 - DN 10	1026769
PPB in-line damper	0.05	FKM	FKM	G 3/4 - DN 10	1026772

* Chlorosulfonated polyethylene

Threaded End Plug

Material	Connection	Order no.
PP	M 20 x 1,5	1030200
PP	G 3/4 – DN 10	1001352

PVC In-Line Damper

Please note: Only use pulsation dampers in conjunction with an overflow device with adjustable back pressure / relief valve.

With this: Dummy plugs to seal the output side of the damper in installations with a T-piece.

Operating conditions

5 - 20 °C - max. operating pressure 10 bar
40 °C - max. operating pressure 6 bar
60 °C - max. operating pressure 2 bar

	Volume l	Damper diaphragm	Seal material	Connection	Order no.
PCE in-line damper	0.05	CSM*	EPDM	M 20 x 1,5	1026774
PCB in-line damper	0.05	FKM	FKM	M 20 x 1,5	1026777
PCE in-line damper	0.05	CSM*	EPDM	G 3/4 – DN 10	1026775
PCB in-line damper	0.05	FKM	FKM	G 3/4 – DN 10	1026778

* Chlorosulfonated polyethylene

Threaded End Plug

Material	Connection	Order no.
PVC	M 20 x 1,5	1030458
PVC	G 3/4 – DN 10	1001349

1.9.9 Suction Lances, Suction Kit Without Level Switch

PPE Variable Suction Lance without Level Switch

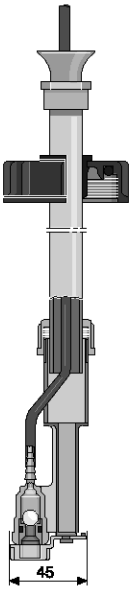

pk_1_067

Variable suction lance without level switch for connection to 5 - 60 litre disposable tanks, comprising a support pipe, foot valve, height-adjustable screw cap and 2 m long suction line. Length 640 mm.

Note: The required screw cap Ø 44 is available as a spare part for container opening Ø 44 and can be swapped by the customer for screw cap Ø 50.

Material of retaining tube and foot valve	PP
Seal material	EPDM
Hose material	PE

Material	Hose o Ø x i Ø mm		Fig.	Order no.
PPE	6 x 4	For 50 mm tank opening	pk_1_067	790539
PPE	8 x 5	For 50 mm tank opening	pk_1_067	790540
PPE	12 x 9	For 50 mm tank opening	pk_1_067	790541

PCB Variable Suction Lance without Level Switch

Variable suction lance without level switch for connection to 5 - 60 litre disposable tanks, comprising a support pipe, foot valve, height-adjustable screw cap and 2 m long suction line. Length 640 mm.

Note: The required screw cap Ø 44 is available as a spare part for container opening Ø 44 and can be swapped by the customer for screw cap Ø 50.

Material of retaining tube and foot valve	PVC
Seal material	FKM
Hose material	Soft PVC

Material	Hose o Ø x i Ø mm		Fig.	Order no.
PCB	6 x 4	For 50 mm tank opening	pk_1_067	790536
PCB	8 x 5	For 50 mm tank opening	pk_1_067	790537
PCB	12 x 9	For 50 mm tank opening	pk_1_067	790538

Screw Cap



pk_1_066

For tanks with opening Ø 44, customers need to order the Ø 44 screw cap as a spare part to replace the Ø 50 screw cap.

	Order no.
Ø 44 screw cap	811626

1.9 Hydraulic/Mechanical Installation Accessories

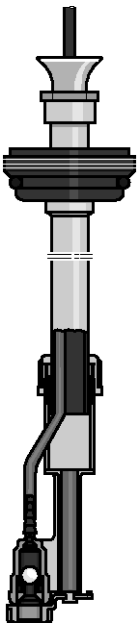

pk_1_125

PPE Variable Suction Lance for 200 Litre Barrel without Level Switch

Variable suction lance without level switch for connection to 200 litre barrel, comprising a support pipe, foot valve, height-adjustable screw plug and 3 m long suction line. Length 1,000 mm.

Note: Adapters for other threads are available on request

Material of retaining tube and foot valve	PP
Seal material	EPDM
Hose material	PE

Material	Hose o Ø x i Ø mm		Fig.	Order no.
PPE	6 x 4	For 2" tank opening DIN S 70 x 6	pk_1_125	790545
PPE	8 x 5	For 2" tank opening DIN S 70 x 6	pk_1_125	790546
PPE	12 x 9	For 2" tank opening DIN S 70 x 6	pk_1_125	790547

PCB Variable Suction Lance for 200 Litre Barrel without Level Switch

Variable suction lance without level switch for connection to 200 litre barrel, comprising a support pipe, foot valve, height-adjustable screw plug and 3 m long suction line. Length 1,000 mm.

Note: Adapters for other threads are available on request

Material of retaining tube and foot valve	PVC
Seal material	FKM
Hose material	Soft PVC

Material	Hose o Ø x i Ø mm		Fig.	Order no.
PCB	6 x 4	For 2" tank opening DIN S 70 x 6	pk_1_125	790542
PCB	8 x 5	For 2" tank opening DIN S 70 x 6	pk_1_125	790543
PCB	12 x 9	For 2" tank opening DIN S 70 x 6	pk_1_125	790544

1.9 Hydraulic/Mechanical Installation Accessories

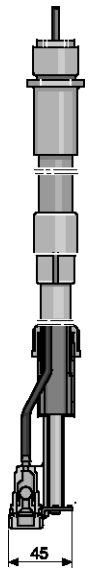

pk_1_069

PPE Variable Suction Assembly for 35 to 1,000 Litre Tanks without Level Switch

Variable suction assembly without level switch for connection to 35 - 1,000 litre tanks, comprising a support pipe, foot valve, threaded connector and 2 m long suction line. Adjustable length.

Material of retaining tube and foot valve	PP
Seal material	EPDM
Hose material	PE

Support pipe length mm	Hose o Ø x i Ø mm	For tank	Fig.	Order no.
375 – 550	6 x 4	35, 60 l	pk_1_069	790333
375 – 550	8 x 5	35, 60 l	pk_1_069	790334
375 – 550	12 x 9	35, 60 l	pk_1_069	790335
655 – 1060	6 x 4	100, 140, 250, 500 l	pk_1_069	790336
655 – 1060	8 x 5	100, 140, 250, 500 l	pk_1_069	790337
655 – 1060	12 x 9	100, 140, 250, 500 l	pk_1_069	790338
1085 – 1425	6 x 4	1000 l	pk_1_069	790453
1085 – 1425	8 x 5	1000 l	pk_1_069	790454
1085 – 1425	12 x 9	1000 l	pk_1_069	790455

PCB Variable Suction Assembly for 35 to 1,000 Litre Tanks without Level Switch

Variable suction assembly without level switch for connection to 35 - 1,000 litre tanks, comprising a support pipe, foot valve, threaded connector and 2 m long suction line. Adjustable length.

Material of retaining tube and foot valve	PVC
Seal material	FKM
Hose material	Soft PVC

Support pipe length mm	Hose o Ø x i Ø mm	For tank	Fig.	Order no.
375 – 550	6 x 4	35, 60 l	pk_1_069	790327
375 – 550	8 x 5	35, 60 l	pk_1_069	790328
375 – 550	12 x 9	35, 60 l	pk_1_069	790329
655 – 1060	6 x 4	100, 140, 250, 500 l	pk_1_069	790330
655 – 1060	8 x 5	100, 140, 250, 500 l	pk_1_069	790331
655 – 1060	12 x 9	100, 140, 250, 500 l	pk_1_069	790332
1085 – 1425	6 x 4	1000 l	pk_1_069	790450
1085 – 1425	8 x 5	1000 l	pk_1_069	790451
1085 – 1425	12 x 9	1000 l	pk_1_069	790452

Suction assemblies with larger nominal widths, see Volume 3, page

1.9.10 Suction Lances, Suction Assemblies with Two-Stage Level Switch

PPE Variable Suction Lance with Two-Stage Level Switch



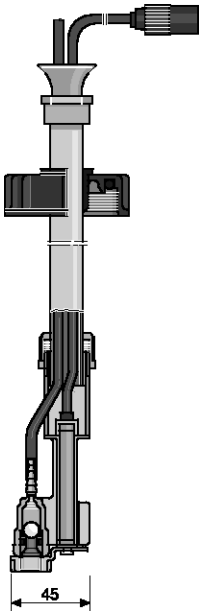

pk_1_075

Variable suction lance with two-stage level switch for connection to 5 - 60 litre disposable tanks, comprising a support pipe, foot valve, level switch with round connector, height-adjustable screw cap and 2 m long suction line. Length 640 mm.

Switch mode when liquid level low: 2 x N/C

Suitable for metering pumps of the Beta®, gamma/ X and delta® product ranges.

Note: The required screw cap Ø 44 is available as a spare part for container opening Ø 44 and can be swapped by the customer for screw cap Ø 50.

Material of retaining tube and foot valve	PP
Seal material	EPDM
Hose material	PE

Material	Hose o Ø x i Ø mm		Fig.	Order no.
PP	6 x 4	PP for Ø 50 tank opening, suction hose	pk_1_075	802277
PP	8 x 5	PP for Ø 50 tank opening, suction hose	pk_1_075	802278
PP	12 x 9	PP for Ø 50 tank opening, suction hose	pk_1_075	790372

PCB Variable Suction Lance with Two-Stage Level Switch

Variable suction lance with two-stage level switch for connection to 5 - 60 litre disposable tanks, comprising a support pipe, foot valve, level switch with round connector, height-adjustable screw cap and 2 m long suction line. Length 640 mm.

Switch mode when liquid level low: 2 x N/C

Suitable for metering pumps of the Beta®, gamma/ X and delta® product ranges.

Note: The required screw cap Ø 44 is available as a spare part for container opening Ø 44 and can be swapped by the customer for screw cap Ø 50.

Material of retaining tube and foot valve	PVC
Seal material	FKM
Hose material	Soft PVC

Material	Hose o Ø x i Ø mm		Fig.	Order no.
PVC	6 x 4	PVC for Ø 50 tank opening, suction hose	pk_1_075	802077
PVC	8 x 5	PVC for Ø 50 tank opening, suction hose	pk_1_075	802078
PVC	12 x 9	PVC for Ø 50 tank opening, suction hose	pk_1_075	790371

1.9 Hydraulic/Mechanical Installation Accessories

PCB Variable Suction Lance with Two-Stage Level Switch



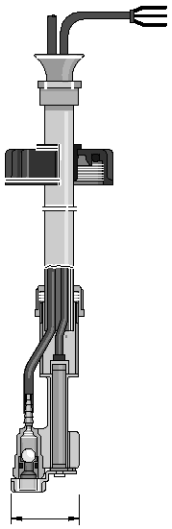

P_AC_0234_SW1

640 mm long for connection to 5 – 60 litre disposable tanks, consisting of a foot valve, level switch with support pipe, height adjustable screw cap and 2 m long suction hose

For metering pump product range DF4a

Switching mode at liquid level low 2 x N/C

PCB Variable Suction Lance with Two-Stage Level Switch

Material of retaining tube and foot valve	PCB
Seal material	FPM
Hose material	Soft PVC

Material	Hose o Ø x i Ø mm		Fig.	Order no.
PCB	6 x 4	PP for Ø 50 tank opening, suction hose	P_AC_0234_SW1	790650

Screw Cap



pk_1_066

For tanks with opening Ø 44, customers need to order the Ø 44 screw cap as a spare part to replace Ø 50 screw cap.

	Order no.
Ø 44 screw cap	811626

PPE Variable Suction Lance for 200 Litre Barrel with Two-Stage Level Switch



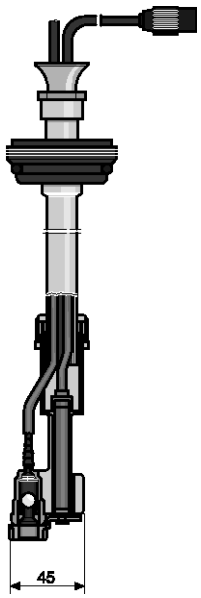

pk_1_076

Variable suction lance with two-stage level switch for connection to 200 litre barrel, comprising a support pipe, foot valve, level switch with round connector, height-adjustable sealing plug and 3 m long suction line. Length 1000 mm.

Switch mode when liquid level low: 2 x N/C

Suitable for metering pumps of the Beta®, gamma/ X and delta® product ranges.

Note: Adapters for other threads are available on request

Material of retaining tube and foot valve	PP
Seal material	EPDM
Hose material	PE

Material	Hose o Ø x i Ø mm		Fig.	Order no.
PP	6 x 4	PP for tank opening 2" DIN S 70 x 6, suction hose	pk_1_076	802279
PP	8 x 5	PP for tank opening 2" DIN S 70 x 6, suction hose	pk_1_076	802280
PP	12 x 9	PP for tank opening 2" DIN S 70 x 6, suction hose	pk_1_076	790374

PCB Variable Suction Lance for 200 Litre Barrel with Two-Stage Level Switch

Material of retaining tube and foot valve	PVC
Seal material	FKM
Hose material	Soft PVC

Material	Hose o Ø x i Ø mm		Fig.	Order no.
PVC	6 x 4	PVC for tank opening 2" DIN S 70 x 6, suction hose	pk_1_076	802079
PVC	8 x 5	PVC for tank opening 2" DIN S 70 x 6, suction hose	pk_1_076	802080
PVC	12 x 9	PVC for tank opening 2" DIN S 70 x 6, suction hose	pk_1_076	790373



PPE Suction Lance for 60 Litre Canister, Fixed Length, Gas-Tight, with Two-Stage Level Switch



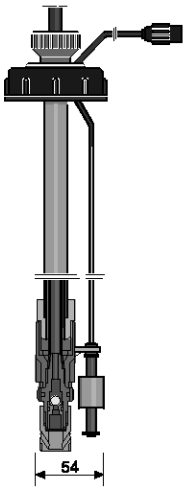

P_AC_0052_SW

Variable suction lance with 2-stage level switch for connection to 60 litre canister, gastight, comprising a support pipe, foot valve, level switch with round connector and 2 m long suction line. Length 560 mm. Version with vent valve and bleed valve.

Switch mode when liquid level low: 2 x N/C

Suitable for metering pumps of the Beta®, gamma/ X and delta® product ranges.

Material of retaining tube and foot valve	PP
Seal material	EPDM
Hose material	PE

Material	Hose o Ø x i Ø mm		Fig.	Order no.
PP	6 x 4	PP for Ø 55 with suction hose	P_AC_0052_SW	802285
PP	8 x 5	PP for Ø 55 with suction hose	P_AC_0052_SW	802286
PP	12 x 9	PP for Ø 55 with suction hose	P_AC_0052_SW	802287

PCB Suction Lance for 60 Litre Canister, Fixed Length, Gas-tight, with Two-Stage Level Switch

Variable suction lance with 2-stage level switch for connection to 60 litre canister, gastight, comprising a support pipe, foot valve, level switch with round connector and 2 m long suction line. Length 560 mm. Version with vent valve and bleed valve.

Switch mode when liquid level low: 2 x N/C

Suitable for metering pumps of the Beta®, gamma/ X and delta® product ranges.

Material of retaining tube and foot valve	PVC
Seal material	FKM
Hose material	Soft PVC

Material	Hose o Ø x i Ø mm		Fig.	Order no.
PVC	6 x 4	PVC for Ø 55 with suction hose	P_AC_0052_SW	802081
PVC	8 x 5	PVC for Ø 55 with suction hose	P_AC_0052_SW	802082
PVC	12 x 9	PVC for Ø 55 with suction hose	P_AC_0052_SW	802083

*** Caution:** The product contains adhesive joints with Tangit. Please note the resistance of Tangit adhesive.

PVDF Suction Lance with Two-Stage Level Switch



P_AC_0250_SW

Fixed length suction lance made of PVDF with two-stage level switch, consisting of PVDF support pipe, foot valve and two-stage level switch with open end. Suction hose PTFE 8 x 6 mm; a suitable connector kit is included in the scope of delivery.

	Length mm	Order no.
PVDF Suction Lance	350	1038304
PVDF Suction Lance	650	1038305



Variable Suction Assembly for 35 to 1,000 Litre Storage Tanks with Two-Stage PPE Level Switch



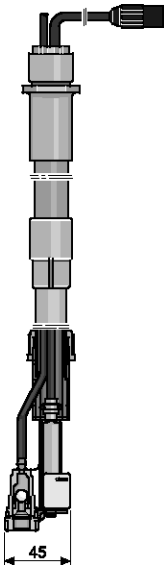

pk_1_077

Variable suction lance with two-stage level switch for connection to 35 to 1,000 litre tanks, comprising a support pipe, foot valve, level switch with 3-pin round connector and 2 m long suction line, or 3 m with 1,000 litre tanks. Adjustable length.

Switch mode when liquid level low: 2 x N/C

Suitable for metering pumps of the Beta®, gamma and delta® product ranges.

Material of retaining tube and foot valve	PP
Seal material	EPDM
Hose material	PE

Support pipe length mm	Hose o Ø x i Ø mm	For tank	Fig.	Order no.
375 – 550	6 x 4	35, 60 l	pk_1_077	790365
375 – 550	8 x 5	35, 60 l	pk_1_077	790366
375 – 550	12 x 9	35, 60 l	pk_1_077	790367
655 – 1060	6 x 4	100, 140, 250, 500 l	pk_1_077	790368
655 – 1060	8 x 5	100, 140, 250, 500 l	pk_1_077	790369
655 – 1060	12 x 9	100, 140, 250, 500 l	pk_1_077	790370
1085 – 1425	6 x 4	1000 l	pk_1_077	790465
1085 – 1425	8 x 5	1000 l	pk_1_077	790466
1085 – 1425	12 x 9	1000 l	pk_1_077	790467

Variable Suction Assembly for 35 to 1,000 Litre Tanks with Two-stage PCB Level Switch

Variable suction lance with two-stage level switch for connection to 35 to 1,000 litre tanks, comprising a support pipe, foot valve, level switch with 3-pin round connector and 2 m long suction line, or 3 m with 1,000 litre tanks. Adjustable length.

Switch mode when liquid level low: 2 x N/C

Suitable for metering pumps of the Beta®, gamma and delta® product ranges.

Material of retaining tube and foot valve	PVC
Seal material	FKM
Hose material	Soft PVC

Support pipe length mm	Hose o Ø x i Ø mm	For tank	Fig.	Order no.
375 – 550	6 x 4	35, 60 l	pk_1_077	790359
375 – 550	8 x 5	35, 60 l	pk_1_077	790360
375 – 550	12 x 9	35, 60 l	pk_1_077	790361
655 – 1060	6 x 4	100, 140, 250, 500 l	pk_1_077	790362
655 – 1060	8 x 5	100, 140, 250, 500 l	pk_1_077	790363
655 – 1060	12 x 9	100, 140, 250, 500 l	pk_1_077	790364
1085 – 1425	6 x 4	1000 l	pk_1_077	790462
1085 – 1425	8 x 5	1000 l	pk_1_077	790463
1085 – 1425	12 x 9	1000 l	pk_1_077	790464

1.9.11 Float Switches

PVDF Level Switch Kit Complete, Two-Stage with Round Connector



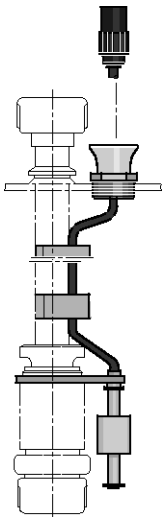

pk_1_079

The level switch set can be ordered in conjunction with the DN 10/ DN 15 suction assemblies. Customers are responsible for fixing.

For Beta®, gamma/ L and delta® metering pump product ranges

Switching mode:	with liquid level low 2 x NC
Materials:	Level switch PVDF
	Float PE foamed
	3 m cable, PE

Connection	Type	Order no.
DN 10/15	with 3-pin round plug	1034879

Single stage float switch



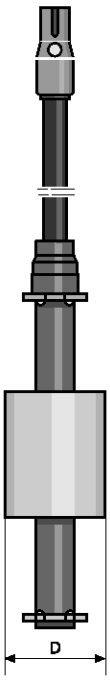

pk_1_080

For minimum display at the same time as switching off the metering pump.

With flat coupling for direct connection to ProMinent metering pump D_4a.

Technical data

Max. switching voltage 48 V,

Switching current 0.5 A,

Switching power 5 W/5 VA,

Temperature range -10 °C to 65 °C, degree of protection IP 67.

Switching mode: at liquid level low 1 x N/O.

Material

Body PVDF, float PE foamed, cable PE.

	Lead length	Order no.
PVDF/PE with flat coupling	2 m	1031588
PVDF/PE with flat coupling	5 m	1031590

Material

Body PVDF, float PVDF, cable PE.

	Lead length	Order no.
PVDF with flat connector	2 m	1034695
PVDF with flat connector	5 m	1034696

Two-Stage Float Switch



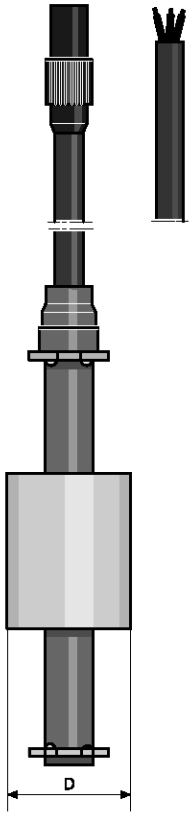

pk_1_081

Two-stage level switch for level monitoring in the storage tank with pre-warning alarm message and switch-off of the metering pump after a further 30 mm reduction in level.

With a 3-pin round connector for direct connection to metering pump or with 3 leads, e.g. in conjunction with relay control, order no. 914768.

Switch mode when liquid level low: 2 x N/C

Suitable for metering pumps of the Beta®, gamma/ X and delta® product ranges.

Technical data

Max. switching voltage: 48 V, Switching current: 0.5 A, Switching power: 5 W/5 VA,

Temperature range: -10 °C to 65 °C, degree of protection IP 67.

	Lead length	Order no.
PVDF/PE with 3-pin round plug	2 m	1031604
PVDF/PE with 3-pin round plug	5 m	1031606
PVDF/PE with 3 wires	2 m	1031607
PVDF/PE with 3 wires	5 m	1031609

Material

Body PVDF, float PVDF, cable PE.

	Lead length	Order no.
PVDF with 3-pin round plug	2 m	1034697
PVDF with 3-pin round plug	5 m	1034698
PVDF with 3 wires	2 m	1034699
PVDF with 3 wires	5 m	1034700

Cable assignment on 3-wire cable:

Colour	Function
black	Earth
blue	Minimum pre-warning
brown	Minimum limit stop

Ceramic Weight for Vertical Fixing of Float Switch

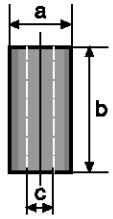

pk_1_082

	Ø A mm	B mm	Ø C mm	Weight g	Type	Order no.
Size 1	25	50	10	60	For round and latch plug	1019244
Size 2	39	32	*	65	For round plug/flat connector	404004
Size 3	40	50	24	70	For round plug/flat connector	1030189

* Slot 13 x 27 mm

With the two stage float switch with round plug, the weight is pushed up when float is attached.

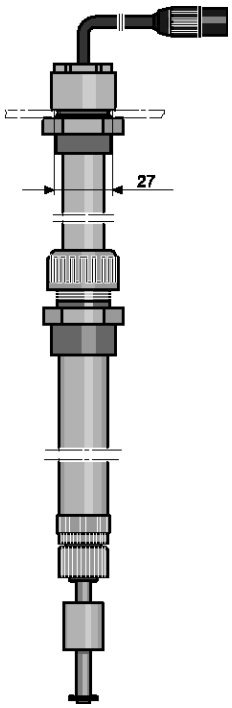

pk_1_084

PVDF/PE Level Switch with Hard PVC Retaining Pipe

Level switch for use in media which attack the PE cable of the level switch and/or for stable attachment in conjunction with electric stirrer, FKM seal. Adjustable length.

2-stage switch mode when liquid level low: 2 x N/C

1-stage switch mode when liquid level low: 1 x N/O

Long support pipe mm	Float switch	Order no.
350 – 550	- two-stage with round plug	802010
660 – 1160	- two-stage with round plug	802011
350 – 550	- one-stage with flat connector	801727
660 – 1160	- one-stage with flat connector	801728



pk_1_126

Extension Lead, 3-Core

	Fig.	Order no.
For 2-stage float switch with round plug and coupler, length, 3 m	pk_1_126	1005559



1.9.12 Metering Monitor, Signal Cable

Flow Control Dosing Monitor for Discharge Side Installation



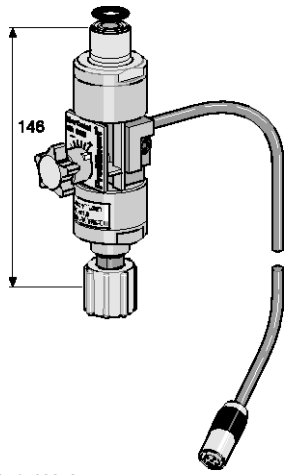

pk_1_086_2

Dosing monitor assembly with connector cable for assembly directly on the dosing head to monitor individual strokes using the float principle. The adjustment screw is used to match the partial flow flowing past the float to the set stroke volume so that an alarm is emitted if the level falls approx. 20 % below the required level. The gamma/ L and gamma/ X metering pumps enable the permitted number of incompletely performed strokes to be selected between 1 to 127, ensuring optimum adaptation to process requirements.

Suitable for metering pumps of the product ranges gamma/ L and gamma/ X in material versions PP, PC, NP and TT.

Please note: It is essential that you observe the minimum values for the stroke length!

Materials

Housing:	PVDF
Float:	PTFE-coated
Seals:	FKM/EPDM

Flow Control for Discharge Side Installation

Flow Control	For pump type	Material	Order no.
Size I	1602	PVDF/EPDM	1009229
	1602	PVDF/FKM	1009335
Size II	1604, 0708, 1009, 0414, 0220, 0715, 0424	PVDF/EPDM	1009336
	1604, 0708, 1009, 0414, 0220, 0715, 0424	PVDF/FKM	1009338

Note the minimum values for the stroke length.

Pump type	Medium operating pressure	Stroke length (scale division)	Max. permissible operating pressure	Stroke length (scale division)
1602	8 bar	> 30 %	16 bar	> 40%
1604	5 bar	> 30 %	16 bar	> 50%
0708	4 bar	> 30 %	7 bar	> 40%
1009	5 bar	> 30 %	10 bar	> 40%
0414	2 bar	> 30 %	4 bar	> 30%
0715	4 bar	> 30 %	7 bar	> 30%
0220	1 bar	> 30 %	2 bar	> 30%
0424	2 bar	> 30 %	4 bar	> 30%

Flow Control for Suction Side Installation



Suitable for the delta® series with slow discharge stroke version. Individual strokes are detected on the suction side where the flow velocity is sufficiently high. With water as the medium, the minimum stroke length is 30%, normal suction stroke version, HV1 or HV2.

Flow Control	For pump type	Material	Order no.
Size II	1608 – 0730	PVDF/EPDM	1036407
	1608 – 0730	PVDF/FKM	1036409
Size III	0450 – 0280	PVDF/EPDM	1036439
	0450 – 0280	PVDF/FKM	1036440

1.9 Hydraulic/Mechanical Installation Accessories

Universal Signal Cable



pk_1_085

For controlling the metering pump via contacts - external control, standard signals - analog control and for potential-free ON/OFF connection - connection function.

For Beta®, gamma and delta® with 5-pin round plastic plug and 5-wire open-ended cable.

	Lead length	Order no.
5-core universal cable, 5-pin round plug	2 m	1001300
5-core universal cable, 5-pin round plug	5 m	1001301
5-core universal cable, 5-pin round plug	10 m	1001302

External Signal Cable

Only for external control of Beta®, gamma/ X and delta® via contacts. With 5-pin round plug, internally bridged and 2-wire cable with open end.

	Lead length	Order no.
2-core external cable, 5-pin round plug	2 m	707702
2-core external cable, 5-pin round plug	5 m	707703
2-core external cable, 5-pin round plug	10 m	707707

PROFIBUS® Adapter, Enclosure Rating IP 65

		Fig.	Order no.
Y-adapter 2 x M12 x 1 male/female	M12 x 1 male	P_AC_0245_SW	1040956
PROFIBUS® termination assembly, comprising a Y-plug and terminating resistance	M12	–	1040955
PROFIBUS® Y-adapter	M 12 x 1	P_AC_0230_SW	1036621
PROFIBUS® termination resistor, plug-in	M 12 x 1	P_AC_0239_SW	1036622

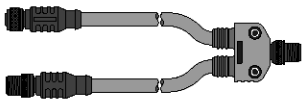

P_AC_0245_SW

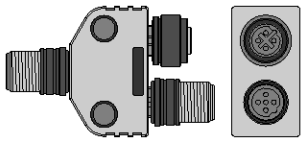

P_AC_0230_SW_1

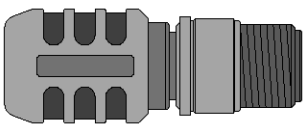

P_AC_0239_SW

1.9.13 Safety Equipment

Diaphragm rupture indicator



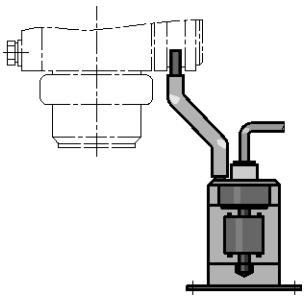

pk_1_087

To trigger an alarm and switch off the metering pump in the event of diaphragm rupture. Consisting of PVC/PE level switch, clear acrylic storage tank, connecting sockets and connecting hose. Potential-free N/O switch, max. contact load 60 V AC, 300 mA, 18 W.

To fit all types of Beta® and gamma.

Retrofitting is also possible.

	Order no.
Diaphragm rupture indicator	803640

Horn

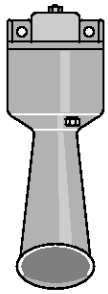

pk_1_088

HUW 55, 230 V, 50-60 Hz, 165 x 60 x 65, 85 phon, for use indoors

(e.g. in connection with fault signalling relay)

	Order no.
HUW 55 Horn	705002

Indicator lamp

Red for wall mounting 230 V, 50-60 Hz (e.g. in connection with fault signalling relay, relay control or clock generator relay)

	Order no.
Indicator lamp, red	914780

1.9.14 Connection Kits for Low-Pressure Metering Pumps



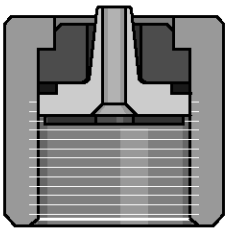

pk_1_089

Connection kit for fitting hoses of different sizes to the suction and pressure connector of the dosing head of alpha, Beta, gamma, delta®, Pneumados b and accessories, consisting of hose nozzle, clamp ring, union nut and seal for one or two connectors.

Single Connector Kit

Material		oØ x iØ mm	Order no.
PP/EPDM (PPE)	for hose	6 x 4	817160
PP/EPDM (PPE)	for hose	8 x 5	817161
PP/EPDM (PPE)	for hose	12 x 9	817162
PP/EPDM (PPE)	for hose	10 x 4	1002587
PP/EPDM (PPE)	for hose	12 x 6	817163
PP/FKM (PPB)	for hose	6 x 4	817173
PP/FKM (PPB)	for hose	8 x 5	817174
PP/FKM (PPB)	for hose	12 x 9	817175
PP/FKM (PPB)	for hose	10 x 4	1002588
PP/FKM (PPB)	for hose	12 x 6	817176
PVC/EPDM (PCE)	for hose	6 x 4	791161
PVC/EPDM (PCE)	for hose	8 x 5	792058
PVC/EPDM (PCE)	for hose	12 x 9	790577
PVC/EPDM (PCE)	for hose	10 x 4	1002590
PVC/EPDM (PCE)	for hose	12 x 6	792062
PVC/FKM (PCB)	for hose	6 x 4	817065
PVC/FKM (PCB)	for hose	8 x 5	817066
PVC/FKM (PCB)	for hose	12 x 9	817067
PVC/FKM (PCB)	for hose	10 x 4	1002589
PVC/FKM (PCB)	for hose	12 x 6	817068
PVDF (PVT)	for hose	6 x 3	1024583
PVDF (PVT)	for hose	6 x 4	1024619
PVDF (PVT)	for hose	8 x 4	1033148
PVDF (PVT)	for hose	8 x 5	1024620
PVDF (PVT)	for hose	12 x 9	1024618
PVDF (PVT)	for hose	10 x 4	1024585
PVDF (PVT)	for hose	12 x 6	1024617
PTFE (TTT)	for hose	6 x 4	817205
PTFE (TTT)	for hose	8 x 5	817206
PTFE (TTT)	for hose	12 x 9	817207
PTFE (TTT)	for hose	12 x 6	817208

Double Connector Kit

Material		oØ x iØ mm	Order no.
PP/EPDM (PPE)	for hose	6 x 4	817150
PP/EPDM (PPE)	for hose	8 x 5	817153
PP/EPDM (PPE)	for hose	12 x 9	817151
PP/EPDM (PPE)	for hose	12 x 6	817152
PP/FKM (PPB)	for hose	6 x 4	817166
PP/FKM (PPB)	for hose	8 x 5	817167
PP/FKM (PPB)	for hose	12 x 9	817168
PP/FKM (PPB)	for hose	12 x 6	817169
PVC/EPDM (PCE)	for hose	6 x 4	817060

Material		oØ x iØ mm	Order no.
PVC/EPDM (PCE)	for hose	8 x 5	817048
PVC/EPDM (PCE)	for hose	12 x 9	817049
PVC/EPDM (PCE)	for hose	12 x 6	791040
PVC/FKM (PCB)	for hose	6 x 4	817050
PVC/FKM (PCB)	for hose	8 x 5	817053
PVC/FKM (PCB)	for hose	12 x 9	817051
PVC/FKM (PCB)	for hose	12 x 6	817052
PVDF (PVT)	for hose	6 x 4	1023246
PVDF (PVT)	for hose	8 x 5	1023247
PVDF (PVT)	for hose	12 x 9	1023248
PVDF (PVT)	for hose	12 x 6	1024586
PTFE (TTT)	for hose	6 x 4	817201
PTFE (TTT)	for hose	8 x 5	817204
PTFE (TTT)	for hose	12 x 9	817202
PTFE (TTT)	for hose	12 x 6	817203

Support Insert Made of Stainless Steel No. 1.4571

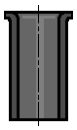

pk_1_090

For connection of PE or PTFE pipe to stainless steel connectors using Swagelock and Serto systems.

	oØ x iØ mm	Order no.
for hose	6 x 4	359365
for hose	8 x 5	359366
for hose	12 x 9	359368
for hose	8 x 6	359362
for hose	12 x 10	359363

1.9.15 Wall Brackets for Metering Pumps

PPE Wall Mounting Bracket



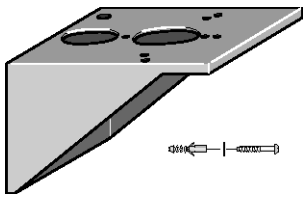

pk_1_092

With fittings, for mounting a metering pump of size Beta®/ 4, Beta®/ 5, gamma/ X and alpha.

The Beta®/ 4, gamma/ X can either be mounted parallel or diagonally to each other.

Dimensions L x W x H: 208 x 120 x 140 mm

Material glasfaserverstärkter Kunststoff PPE

	Fig.	Order no.
for BT4, BT5, gamma/ X, G/ 4, G/ 5, D_4a	pk_1_092	810164

PP Adapter Plate



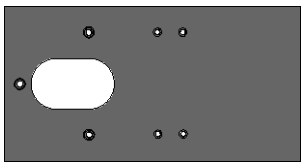

pk_1_121

With fixing materials for vertical wall-mounting of Beta® or gamma pumps with self-degassing liquid ends. Used with PPE wall bracket.

	Fig.	Order no.
for BT4, BT5, gamma/ X	pk_1_121	1003030

1.9 Hydraulic/Mechanical Installation Accessories

Metering Pump Wall Mounting Bracket

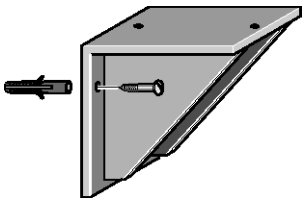

pk_2_036

PP wall bracket, holds pump parallel to the wall, includes fixings.

Dimensions L x W x H: 230 x 220 x 220 mm

	Fig.	Order no.
For delta®	pk_2_036	1001906

Wall/Foot Bracket

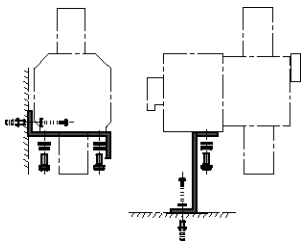

pk_1_095

To hold Pneumados metering pump. Floor or wall mounted, made of coated aluminium. Includes fittings.

	Fig.	Order no.
Dimensions: L x W x H 92 x 80 x 30	pk_1_095	790605

Portable Plastic Pump Stand

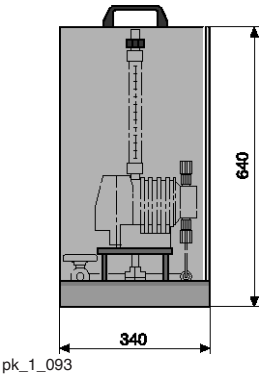

pk_1_093

To accommodate a metering pump of the product range beta® or gamma/ X. The pump stand can either be designed in PP or black PE. It is prepared for accommodating a fixed pipe and has collector equipment for escaping feed chemical, e.g. in the event of a leakage on the suction line or a rupture of the diaphragm.

Supplied with carrying handle, but without pump and pipework

	Fig.	Order no.
Light grey PP	pk_1_093	1000180
Black PE	pk_1_093	1000181

PVC Right-Angled Threaded Connector

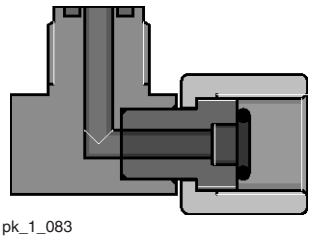

pk_1_083

For mounting multifunctional valve onto Beta® or gamma/ L models, self-degassing liquid end version.

	Material	Fig.	Order no.
PCE Version	PVC/EPDM	pk_1_083	1003472
PCB Version	PVC/FKM	pk_1_083	1003318

* **Caution:** The product contains adhesive joints with Tangit. Please note the resistance of Tangit adhesive.

1.9.16 Contact Water Meters for Use in Potable Water and Accessories

DIN Version contact water meter

PN 10 bar, readable, type series MNR-K, operating temp. 40 °C, contact load max. 100 mA, 24 V, NG - nominal size.

Q_{max} = maximum load, Q_d = permanent load

Q_n = nominal load (1/2 Q_d gccording to calibration regulations)

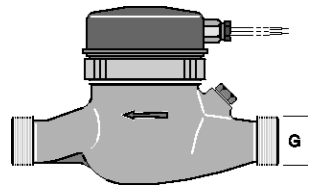

pk_1_096

Q_{max} /Q_d / Q_n	Threaded connector width	Connector thread	Length without thread	Pulse interval	Order no.
NG - m^3/h	R DN/mm	G	mm	l	
5/5/2.5	3/4 – DN 20	1	190	0.05	304467
5/5/2.5	3/4 – DN 20	1	190	0.10	304432
5/5/2.5	3/4 – DN 20	1	190	0.25	304455
5/5/2.5	3/4 – DN 20	1	190	0.50	304431
5/5/2.5	3/4 – DN 20	1	190	1.00*	304434
5/5/2.5	3/4 – DN 20	1	190	10.00	304453
12/12/6	1 – DN 25	1 1/4	260	0.25	1004550
12/12/6	1 – DN 25	1 1/4	260	1.00*	1039764
12/12/6	1 – DN 25	1 1/4	260	1.50*	1004549
12/12/6	1 – DN 25	1 1/4	260	2.00*	1004546
12/12/6	1 – DN 25	1 1/4	260	10.00*	1004547
20/20/10	1 1/2 – DN 40	2	300	2.00*	1039765
20/20/10	1 1/2 – DN 40	2	300	3.00	1004552
20/20/10	1 1/2 – DN 40	2	300	10.00	1004554
30/30/15	2 – DN 50	2 1/2	270	3.00	1020551
30/30/15	2 – DN 50	2 1/2	270	4.00*	1020552
30/30/15	2 – DN 50	2 1/2	270	10.00	1020550

*Standard storage tank

1.9 Hydraulic/Mechanical Installation Accessories

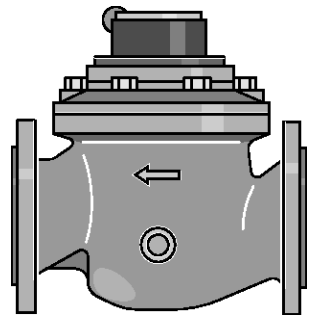
pk_1_097

DIN Version contact water meter

Readable, series WS-K, operating temp. 40 °C, contact load max. 30 mA, 30 V, DIN 2501 flange, PN 16 bar.

Q_{max} = Maximum load

Q_d = Continuous load

Q_n = Nominal load

Q_{max} /Q_d / Q_n	Connector width	Lower working limit	Length	Pulse interval	Order no.
NG - m^3/h	DN/mm	l/h	mm	l	
110/55/40	DN 80	275	300	10.00*	1004560
110/55/40	DN 80	275	300	25.00	1004558
110/55/40	DN 80	275	300	100.00	1004559
180/90/60	DN 100	300	360	10.00	1004567
180/90/60	DN 100	300	360	25.00*	1004556
180/90/60	DN 100	300	360	50.00	1004557
350/200/150	DN 150	800	500	50.00*	1004568

*Standard storage tank

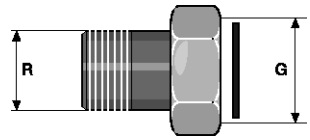

pk_1_098

Union assembly set with seal

For threaded water meter, brass.

		Order no.
R 3/4	G 1	359029
R 1	G 1 1/4	801322
R 1 1/4	G 1 1/2 – (turboDOS®)	359034
R 1 1/2	G 2	359037
R 2	G 2 1/2	359039

Union assembly set with seal

For threaded water meter with G 1/4 connector for injection valve, brass.

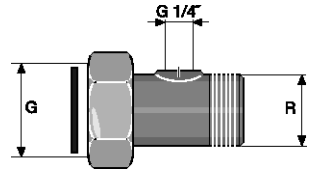

P_AC_0249_SW

		Order no.
R 3/4	G 1 – 1/4	359030
R 1	G 1 1/4 – 1/4	359032
R 1 1/2	G 2 – 1/4	359038
R 2	G 2 1/2 – 1/4	801321

1.9 Hydraulic/Mechanical Installation Accessories

O-ring loaded injection valve

For use with threaded connectors on water meters.

Short design for R 3/4 and R 1 threaded connectors, long design for R 1 1/2 and R 2 threaded connectors.

Applications when using appropriate metering lines

25 °C - max. operating pressure 16 bar

45 °C - max. operating pressure 9 bar

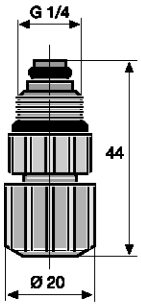

P_AC_0008_SW

Connector		Material	oØ x iØ mm	Fig.	Order no.
6/4 - G 1/4 short	for hose	PP/FKM	6 x 4	P_AC_0008_SW	914754
6/4 - G 1/4 long	for hose	PP/FKM	6 x 4	P_AC_0009_SW	741193
6/4 - G 1/4 short	for hose	PVC/FKM	6 x 4	P_AC_0008_SW	914558
6/4 - G 1/4 long	for hose	PVC/FKM	6 x 4	P_AC_0009_SW	915091

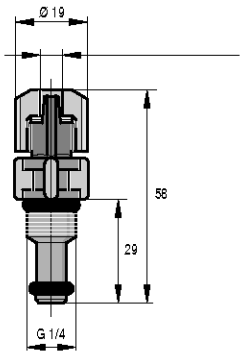

P_AC_0009_SW

1.10.1 Spare Parts Kits

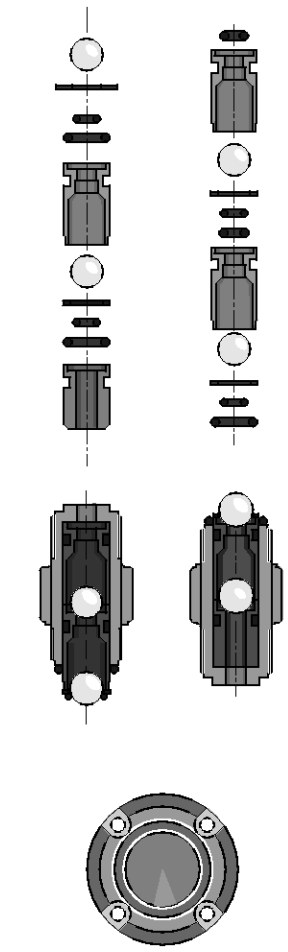

pk_1_008

Spare Parts Kits for Solenoid Driven Metering Pump Beta® a and gamma/ L

Spare parts kits for Beta® a und gamma/ L, consisting of:

- 1 diaphragm
- 1 suction valve assembly
- 1 discharge valve assembly
- 2 valve balls
- 1 connector kit

Stainless steel version without suction valve assembly and without discharge valve assembly

Type	Materials in contact with the medium	Order no.
Type 1000	PPE	1001644
	PPB	1001652
	NPE	1001713
	NPB	1001721
	PPT, NPT, PVT	1023107
	TTT	1001737
	SST	1001729
Type 1601	PPE	1001645
	PPB	1001653
	NPE	1001714
	NPB	1001722
	PPT, NPT, PVT	1023108
	TTT	1001738
	SST	1001730
Type 1602	PPE	1001646
	PPB	1001654
	NPE	1001715
	NPB	1001723
	PVT, PPT, NPT	1023109
	TTT	1001739
	SST	1001731
Type 1005 and Type 1605	PPE	1001647
	PPB	1001655
	NPE	1001716
	NPB	1001724
	PVT, PPT, NPT	1023110
	PVT4	1019066
	TTT	1001740
	SST	1001732
Type 0708 and Type 1008	PPE	1001648
	PPB	1001656
	NPE	1001717
	NPB	1001725
	PVT, PPT, NPT	1023111
	PVT4	1019067
	TTT	1001741
	SST	1001733
Type 0413 and Type 0713	PPE	1001649
	PPB	1001657
	NPE	1001718
	NPB	1001726
Type 0220 and Type 0420	PPE	1001650
	PPB	1001658
	NPE	1001719
	NPB	1001727
	PVT, PPT, NPT	1023113
	PVT4	1019070
	TTT	1001754
	SST	1001735



Type	Materials in contact with the medium	Order no.
Type 0232	PPE	1001651
	PPB	1001659
	NPE	1001720
	NPB	1001728
	PVT, PPT, NPT	1023124
	TTT	1001755
	SST	1001736

Spare Parts Kits for Solenoid Driven Metering Pump Beta® a and gamma/ L with Self-bleeding Dosing Head with Bypass (SEK)

Spare parts kits for beta® a and gamma/ L with self-bleeding dosing head, consisting of:

- 1 diaphragm
- 1 suction valve assembly
- 1 discharge valve assembly
- 1 bleed valve assembly
- 2 valve balls
- 1 connector kit

Type	Materials in contact with the medium	Order no.
Type 1601	PPE9	1001756
	PPB9	1001762
	NPE9	1001660
	NPB9	1001666
Type 1602	PPE9	1001757
	PPB9	1001763
	NPE9	1001661
	NPB9	1001667
Type 1005 and Type 1605	PPE9	1001758
	PPB9	1001764
	NPE	1001662
	NPB9	1001668
Type 0708 and Type 1008	PPE9	1001759
	PPB9	1001765
	NPE9	1001663
	NPB9	1001669
Type 0413 and Type 0713	PPE9	1001760
	PPB9	1001766
	NPE9	1001664
	NPB9	1001670
Type 0220 and Type 0420	PPE9	1001761
	PPB9	1001767
	NPE9	1001665
	NPB9	1001671

1.10.2 Pump Diaphragms

Replacement Diaphragms for Solenoid Driven Metering Pump Beta® a and gamma/ L

Type	Materials in contact with the medium	Order no.
Type 1000	all materials	1000244
Type 1601	all materials	1000245
Type 1602	all materials	1000246
Type 1005 and Type 1605	all materials	1000247
Type 0708 and Type 1008	all materials	1000248
Type 0413 and Type 0713	all materials	1000249
Type 0220 and Type 0420	all materials	1000250
Type 0232	all materials	1000251

1.10.3 Custom Valve Balls/Valve Springs

For on-site retrofitting of metering pumps and accessories, for applications where standard materials are unsuitable. Supplied loose only, not fitted.

Valve balls

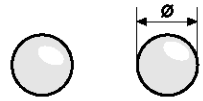

pk_1_102

Material	Ø mm		Order no.
PTFE	4.7	for valve Ø 6 mm	404255
PTFE	9.5	for valve Ø 8 and 12 mm	404258
PTFE	11.0	for valve DN 10	404260
PTFE	16.0	for valve DN 15	404259
Keramik	4.7	for valve Ø 6 mm	404201
Keramik	9.2	for valve Ø 8 and 12 mm	404281
Keramik	11.0	for valve DN 10	404277
Keramik	16.0	for valve DN 15	404275

Valve springs for liquid ends

With approx. 0.1 bar priming pressure for spring loading of the valve balls in the liquid end. Recommended to improve the valve function and increase metering accuracy, in particular for viscous metering media above 50 mPas.

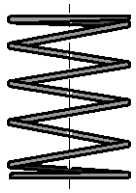

pk_1_103

Material	Prepressure bar		Order no.
1.4571	0.1	for valve 4.7	469406
1.4571	0.1	for valve 9.2	469403
1.4571	0.1	for mikro g/ 5	469437
1.4571	0.1	for mikro g/ 5	469438
1.4571	0.1	for mikro g/ 5	469439
Hast. C	0.1	for valve DN 10	469114
Hast. C	0.1	for valve DN 15	469107

Valve springs for injection valves

Approx. 0.5/1/2 bar prepressure for increasing metering accuracy and preventing suction and siphoning effect.

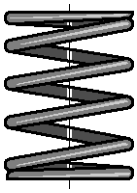

pk_1_104

Material	Prepressure bar		Order no.
1.4571	1.0	for R 1/4" - Ø 6 mm connector	469401
Hast. C	0.5	for R 1/2" - Ø 6, 8 and 12 mm connector	469404
Hast. C	1.0	for R 1/2" - Ø 6, 8 and 12 mm connector	469413
Hast. C	2.0	for R 1/2" - Ø 6, 8 and 12 mm connector	469410
Hast. C	0.5	for DN 10	469115
Hast. C	1.0	for DN 10	469119
Hast. C	0.5	for DN 15	469108
Hast. C	1.0	for DN 15	469116

Valve spring made of Hastelloy C with FEP coating

Material	Prepressure bar		Order no.
Hast. C/FEP	0.5	for R 1/2" - Ø 6, 8 and 12 mm connector	818590
Hast. C/FEP	1.0	for R 1/2" - Ø 6, 8 and 12 mm connector	818536
Hast. C/FEP	0.5	for DN 10	818515
Hast. C/FEP	0.5	for DN 15	818516

1.10.4 Connector Parts/Fittings

PVC hose/adhesive nipple

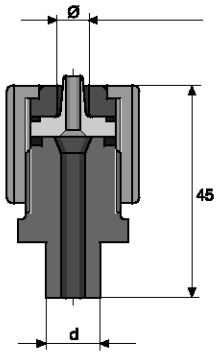

pk_1_107

With union nut, for connection of PE tubing to rigid PVC fittings for on-site construction of connector system.

	d mm		oØ x iØ mm	Fig.	Order no.
Nozzle/solvent union	12	for hose	6 x 4	pk_1_107	817088
	12	for hose	8 x 5	pk_1_107	817089
	12	for hose	12 x 9	pk_1_107	817090
	12	for hose	12 x 6	pk_1_107	817091
	16	for hose	6 x 4	pk_1_107	817092
	16	for hose	8 x 5	pk_1_107	817093
	16	for hose	12 x 9	pk_1_107	817094
	16	for hose	12 x 6	pk_1_107	817095

* **Caution:** The product contains adhesive joints with Tangit. Please note the resistance of Tangit adhesive.

PVC straight solvent union

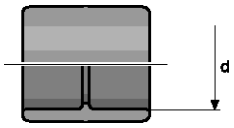

pk_1_109

	d mm		Fig.	Order no.
PVC straight solvent union	12	DN 8	pk_1_109	356608
	16	DN 10	pk_1_109	356609
	20	DN 15	pk_1_109	356610
	25	DN 20	pk_1_109	356611

PVC T-joint

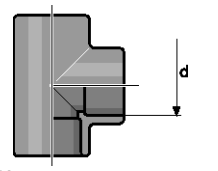

pk_1_113

	d mm		Fig.	Order no.
PVC T-joint	12	DN 8	pk_1_113	356406
	16	DN 10	pk_1_113	356407
	20	DN 15	pk_1_113	356408
	25	DN 20	pk_1_113	356409

90° PVC elbow joint

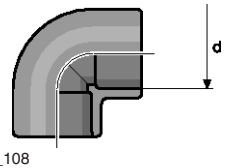

pk_1_108

	d mm		Fig.	Order no.
90° PVC elbow joint	12	DN 8	pk_1_108	356315
	16	DN 10	pk_1_108	356316
	20	DN 15	pk_1_108	356317
	25	DN 20	pk_1_108	356318

PVC insert (straight solvent union)

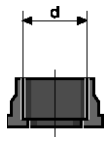

pk_1_115

	d mm		Fig.	Order no.
PVC insert (straight solvent union)	12	DN 8	pk_1_115	356571
	16	DN 10	pk_1_115	356572
	20	DN 15	pk_1_115	356573
	25	DN 20	pk_1_115	356574

1.10 Mechanical/Hydraulic Special Accessories

PVC short reducing union

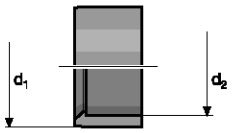

pk_1_110

	d1 mm	d2 mm	Fig.	Order no.
PVC short reducing union	12	8	pk_1_110	357025
	16	10	pk_1_110	357026
	20	16	pk_1_110	357027
	25	20	pk_1_110	357028

PVC hose connection nozzle

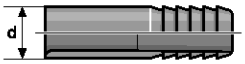

pk_1_111

	d mm		Fig.	Order no.
PVC hose connection nozzle	12	DN 8	pk_1_111	356655
	16	DN 10	pk_1_111	356656
	20	DN 15	pk_1_111	356657
	25	DN 20	pk_1_111	356658

Hose nozzle with seal



pk_2_046

Material	d mm		Fig.	Order no.
PVC	16	DN 10	pk_2_046	800554
PVC	20	DN 15	pk_2_046	811407
PVC	25	DN 20	pk_2_046	811408
PP	16	DN 10	pk_2_046	800657
PP	20	DN 15	pk_2_046	800655
PP	25	DN 20	pk_2_046	800656

Union nuts

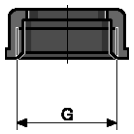

pk_1_116

Material	Connection	Fig.	Order no.
PP	G 5/8 – DN 8	pk_1_116	800665
PP	G 3/4 – DN 10	pk_1_116	358613
PP	G 1 – DN 15	pk_1_116	358614
PP	G 1 1/4 – DN 20	pk_1_116	358615
PVC	G 5/8 – DN 8	pk_1_116	800565
PVC	G 3/4 – DN 10	pk_1_116	356562
PVC	G 1 – DN 15	pk_1_116	356563
PVC	G 1 1/4 – DN 20	pk_1_116	356564
PVDF	G 3/4 – DN 10	pk_1_116	358813

1.10 Mechanical/Hydraulic Special Accessories

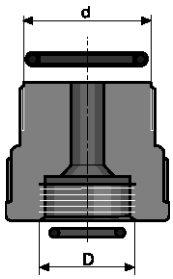

pk_1_114

Single adapter kit

For connection of system + GF+ threaded connectors to metering pumps and accessories.

Material	Size	Internal thread D	External thread d	Order no.
PP/EPDM	For DN 8 threaded connector	M20 x 1,5	G 5/8	817164
PP/FKM	For DN 8 threaded connector	M20 x 1,5	G 5/8	740604
PVC/EPDM	For DN 8 threaded connector	M20 x 1,5	G 5/8	740583
PVC/FKM	For DN 8 threaded connector	M20 x 1,5	G 5/8	817069
PVDF/PTFE	For DN 8 threaded connector	M20 x 1,5	G 5/8	1031073
PP/EPDM	For DN 10 threaded connector	M20 x 1,5	G 3/4	817165
PP/FKM	For DN 10 threaded connector	M20 x 1,5	G 3/4	817178
PVC/EPDM	For DN 10 threaded connector	M20 x 1,5	G 3/4	740585
PVC/FKM	For DN 10 threaded connector	M20 x 1,5	G 3/4	740601
PVDF/PTFE	For DN 10 threaded connector	M20 x 1,5	G 3/4	1028409

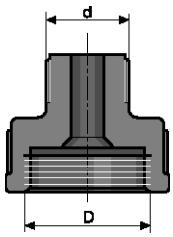

pk_1_124

Single adapter kit

For fitting series A, B, C and E accessories to current metric M20 x 1.5 connectors.

Material	Size	Internal thread D	External thread d	Order no.
PP	6-8 mm connector	M20 x 1.5	G 1/4	811904
PVC	6-8 mm connector	M20 x 1.5	G 1/4	811902

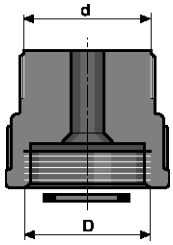

pk_1_127

Double adapter kit

For fitting laboratory type GL connectors, manufactured by Bola or Schott.

Material	Size	Internal thread D	External thread d	Order no.
PTFE	GL 18	M20 x 1.5	GL 18	1000990

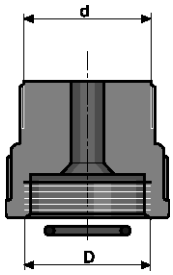

pk_1_122

Single adapter kit

For fittings of current accessories with metric M20 x 1.5 connectors to series A, B, C and E.

Material	Size	Internal thread D	External thread d	Order no.
PP/EPDM	6-8 mm connector	G 1/4	M20 x 1.5	741088
PVC/FKM	6-8 mm connector	G 1/4	M20 x 1.5	741087
PTFE	6-8 mm connector	G 1/4	M20 x 1.5	741091
PP/EPDM	12 mm connector	G 3/8	M20 x 1.5	741090
PVC/FKM	12 mm connector	G 3/8	M20 x 1.5	741089
PTFE	12 mm connector	G 3/8	M20 x 1.5	741092



1.10 Mechanical/Hydraulic Special Accessories

Adapter

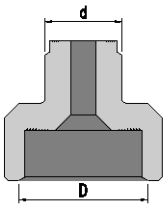

P_AC_0254_SW

Fits connector set for 12 x 9 hose.

Material	Fig.	Internal thread D	External thread d	Order no.
PP	P_AC_0255	DN 10, G 3/4	M20 x 1.5	800815
PVC	P_AC_0255	DN 10, G 3/4	M20 x 1.5	800816
PVDF	P_AC_0254	DN 10, G 3/4	M20 x 1.5	1017406
PVDF	P_AC_0254	DN 15, G 1	M20 x 1.5	1028530

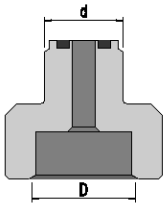

P_AC_0255_SW

Stainless steel threaded clip

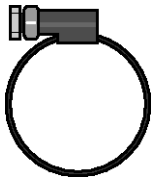

pk_1_068

For connection of suction and discharge tubing to pressure nozzles.

	Clamping range mm	Order no.
DN 10 clamping ring	16 – 25	359703
DN 15 clamping ring	20 – 32	359705

Stainless steel straight threaded male adapter

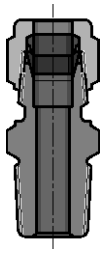

pk_1_028

Swagelock system, stainless steel SS 316 (1.4401) for fitting tubing to dosing heads and valves with inner threads and for SB versions.

	Order no.
6 mm - ISO 7 R 1/4	359526
8 mm - ISO 7 R 1/4	359527
12 mm - ISO 7 R 1/4	359528
12 mm - ISO 7 R 3/8	359520
16 mm - ISO 7 R 3/8	359521
16 mm - ISO 7 R 1/2	359529

Stainless steel clamping ring sets

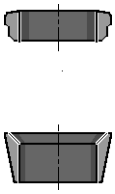

pk_1_117

For use with stainless steel threaded connectors for metering pumps and Swagelock accessories. Both parts must be replaced at the same time. Set consists of back and front clamping rings.

	oØ mm	Order no.
Set of rings Ø 6 for pipe	6	104232
Set of rings Ø 8 for pipe	8	104236
Set of rings Ø 12 for pipe	12	104244

Stainless steel threaded connector

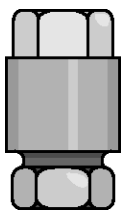

pk_1_118

Serto system for connecting PE or PTFE discharge line to stainless steel pipe, made from stainless steel with clamping ring, but without support insert (parts in contact with chemicals stainless steel 1.4571).

	Order no.
6 mm outer diameter to 6 mm outer diameter stainless steel pipe	359317
8 mm outer diameter to 8 mm outer diameter stainless steel pipe	359318
12 mm outer diameter to 12 mm outer diameter stainless steel pipe	359320

1.11 Application Examples

1.11.1 Volume-proportional Metering of Chlorine Bleach Solution in Potable Water

Product:	**Beta®**
Metered medium:	**NaOCl**
Sector:	**Potable water**
Application:	**Disinfection**

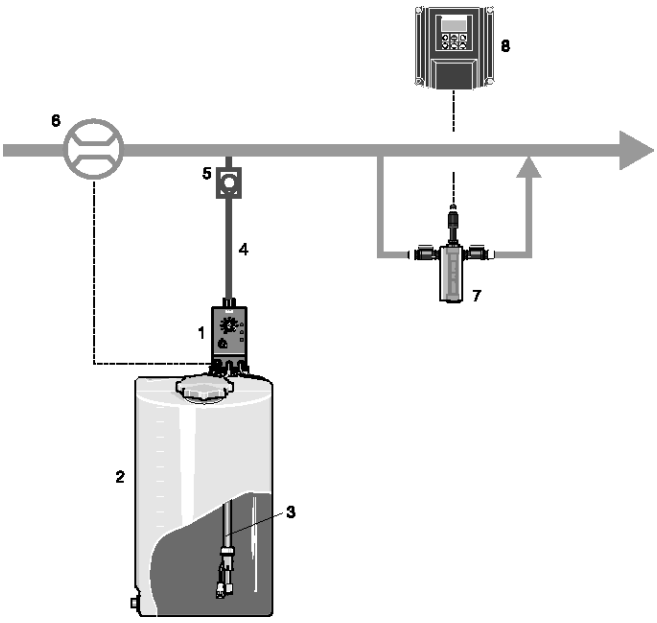

pk_1_132

1 Beta®/ 4 with self-bleeding liquid end made of PMMA/PVC (Plexiglas)
2 Feed chemical tank
3 Intake fitting for foot valve and level switch
4 Soft PVC metering line with woven fabric or PTFE
5 Metering valve
6 Contact water meter
7 Chlorine measuring sensor
8 Control measurement

Task and requirements

- Volume-proportional feed of chlorine bleach solution into the main water flow
- Monitoring of chlorine content after metering

Operating conditions

- Variable flow
- Installation in closed buildings

Application information

- The metered medium emits gas, therefore after a relatively long period of pump idleness, an air (gas) bubble may have formed in the metering line causing an interruption in metering operation.
- Metering is to be fully automatic and without malfunctions as operating personnel are not always present in the waterworks or water supply.

Solution

- Beta® solenoid-driven metering pump with self-bleeding liquid end
- Contact water meter in main line for pump activation
- DULCOMETER® measuring and control technology for final inspection

Benefits

- High degree of reliability provided by self-bleeding liquid end
- Reliable protection against overmetering and undermetering with downstream final inspection



1.11 Application Examples

1.11.2 Shock Metering of Biocide in Cooling Water Circuit

Product: **gamma/ L**
Metering medium: **biocide**
Industry: **cooling water treatment**
Application: **disinfection**

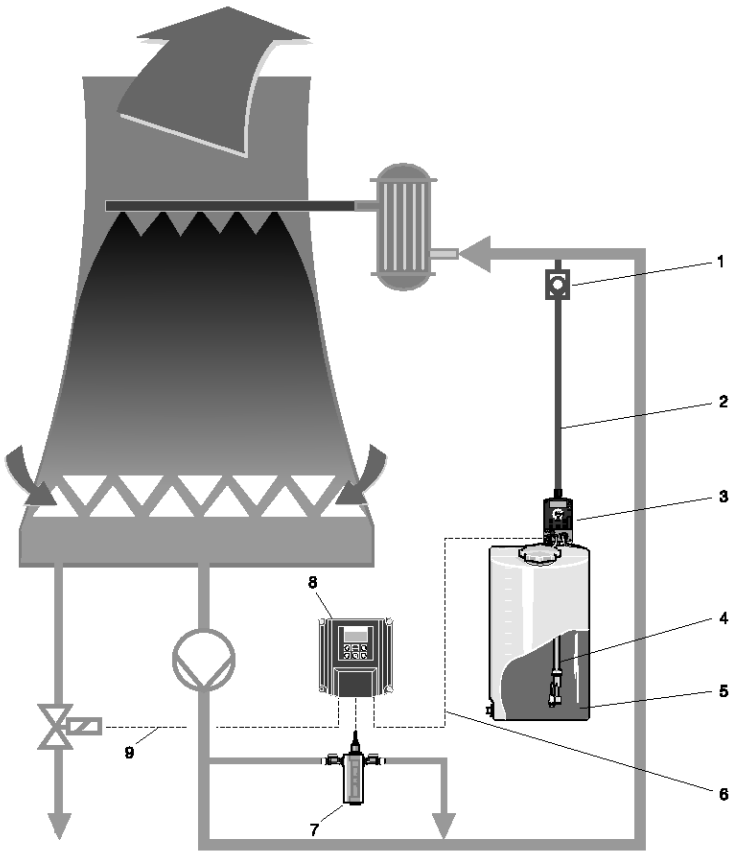

1 Metering
2 Metering line
3 gamma/ L with process timer
4 Intake fitting for foot valve and level switch
5 Metering tank
6 Relay output for deactivation of conductivity-controlled desalination during biocide shock metering
7 Conductivity sensor
8 D1C conductivity
9 Activation – solenoid valve for desalination
10 Waste water

pk_1_133

Tasks and requirements

- Increasing the biocide content e.g. at weekly intervals destroys all biological substances in the cooling water.
- Local increases in concentration may occur resulting in conductivity-controlled desalination. They disappear again after full dispersion in the cooling water circuit.
- Conductivity-controlled desalination must therefore be deactivated during shock metering and for an appropriate time afterwards.

Operating conditions

- Aggressive chemicals (oxidising)
- Installation of the metering pump in the building

Notes on application

- Shock metering takes place at defined intervals, e.g. weekly.
- In smaller cooling circuits, the metering pump with the integrated process timer replaces the PLC.
- Irrespective of the set metering times, conductivity-controlled desalination must be deactivated via a potential-free contact.
- In some cases, desalination is performed before each shock metering cycle. This procedure must be controlled by means of a second relay contact in the pump.

1.11 Application Examples

Solution

- gamma/L with process timer and corresponding relay outputs
- The relays can be assigned to the process timer as needed and execute the necessary switching functions.
- The pump itself operates at the specified metering times.
- The metering program can be set up on a PC and downloaded on site to the pump.
- Metering programs can be sent by e-mail.
- Liquid end made of PVDF for excellent chemical resistance

Benefits

- High IP rating of IP 75 for the control by integration in the pump.
- Cost savings as no PLC required
- Saving of installation costs thanks to compact design
- Simple and safe setting up of programs on the PC
- Fast downloading to the pump, especially in cases where several pumps run with the same program.



2.0 Overview of Tanks and Transfer Pumps

2.0.1 Selection Guide

The right accessories offer even more: They increase the performance range, application options or the feed rates.

This chapter includes storage tanks, transfer and peristaltic pumps, with which you can define the pump capacity precisely and store liquids safely.

The table will assist with quick selection. It is sorted by relevant key figures and details.

Selection Guide - Tanks:

NEW

	Shape	Effective volume
Dosing tank, PE natural/transparent	Cylindrical	35 – 1,500 l
Natural/transparent PE dosing tank with flat mounting surface	Cylindrical	35 – 250 l

Selection Guide - Transfer Pumps:

	Drive	Capacity range
Eccentric Screw Pump Spectra	Electric	to 12,000 l/h
Centrifugal Pump von Taine®	Electric	Up to 22,500 l/h
Air-Operated Diaphragm Pump Duodos	Compressed air	Up to 6,700 l/h, 7 bar
Barrel Pump DULCO®Trans	Electric	to 4,800 l/h

Selection aid for rotary pump

NEW

	Drive	Capacity range
Rotary Lobe Pumps	Electric	Capacity of 25 – 100 m^3/h, 4 – 10 bar

Selection Guide - Peristaltic Pumps

	Drive	Capacity range
Peristaltic Pump DULCO®flex	Electric	Up to 15,000 l/h, max. 15 bar

Metering and storage tanks
see page → 2-10

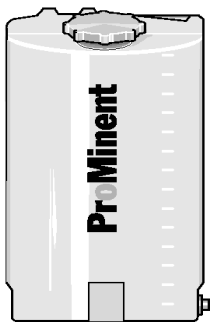

Chemical transfer pumps
see page → 2-10

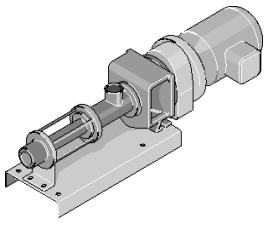

Rotary lobe pump
see page → 2-23



Peristaltic pumps
see page → 2-24

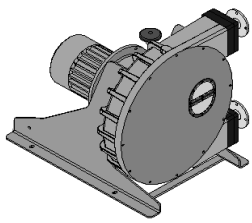

2.1 PE Metering Tanks and Collecting Pans

2.1.1 Dosing Tanks

Anyone who works with chemicals, needs to store them safely. ProMinent® dosing tanks are tough and ideal for working with metering pumps.

Useful capacity 35 – 1,500 l

PE storage tanks produced in a rotation process. They can be enhanced with ProMinent® metering pumps, suction lances and stirrers. The stackable PE collection pans are available in matching sizes.

Your benefits

- Environmentally-friendly storage of liquid chemicals
- Robust and durable: stable design in UV-stabilised PE (polyethylene)
- Scale for litres and US gallons
- Simple to install: sintered threaded sockets for fixing ProMinent metering pumps and stirrers on storage tanks
- Safe storage: A screw cover closes safely (push-on lid for 35-litre storage tank)
- Flat sides to secure the storage tank.
- Standard colours: natural, black, blue, yellow and red.

Natural Coloured/Transparent PE Dosing Tank

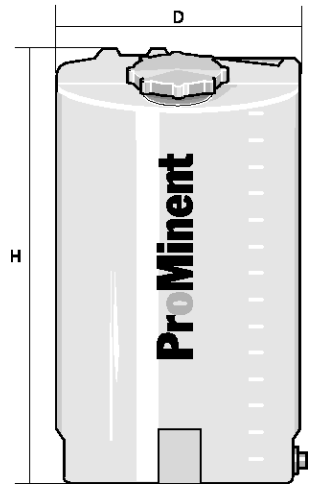

pk_3_0001_1a

Usable capacity l	D mm	H mm	Threaded bush for metering pumps	Weight kg	Order no.
35	350	485	without threaded bushes	3.5	791993
60	410	590	gamma/ X, Beta®	5.0	791994
100	500	760	alpha, Beta®, gamma/ X	7.0	1001490
140	500	860	alpha, Beta®, gamma/ X	9.5	791995
250	650	1,100	alpha, Beta®, gamma/ X, Sigma/ 1/ 2/ 3, delta®	17.5	1023175
500	820	1,190	2 x gamma/ X, 2 x Sigma/ 1, 2 x delta®, 2 x Beta®	24.5	791997
1,000	1,070	1,260	2 x gamma/ X, 2 x Sigma/ 1/ 2/ 3, 2 x delta®, 2 x Beta®	51.0	1010909
1,500	1,150	1,735	2 x gamma/ X, 2 x Sigma/ 1/ 2/ 3, 2 x delta®, 2 x Beta®	80.0	1060975

Natural Coloured/Transparent PE Dosing Tank

Designed for the installation of a manually operated or electric stirrer.

Usable capacity l	with an opening for	Order no.
60	manually operated stirrer	792104
60	electric stirrer	792105
100	manually operated stirrer	1002034
100	electric stirrer	1002033
140	manually operated stirrer	792106
140	electric stirrer	792107
250	manually operated stirrer	792108
250	electric stirrer	792109
500	manually operated stirrer	792110
500	electric stirrer	792111
1,000	manually operated stirrer	1010910
1,000	electric stirrer	1010911

The 35 – 1,000-litre storage tank have an R 3/4" threaded sleeve (1,500 l: R 1 1/4") for drainage that can be drilled to Ø 10 mm on site if required. A PE R 3/4" sealing stopper (1,500 l: R 1 1/4") with a seal is screwed in.

Dosing tanks without ProMinent logo are available on request.

2.1 PE Metering Tanks and Collecting Pans

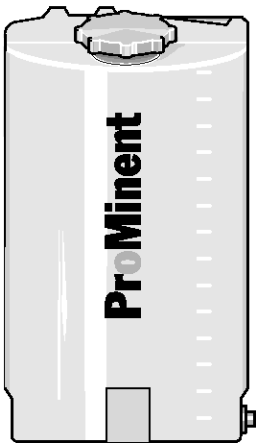

pk_3_001_1

Black PE Dosing Tank

For light sensitive media.

Usable capacity l	Order no.
35	791998
60	791999
100	1001322
140	792000
250	1023176
500	792002
1,000	1010912
1,500	1060976

Blue PE Dosing Tank

Usable capacity l	Order no.
35	1003812
60	1003813
100	1003814
140	1003815
250	1023177
500	1003817
1,000	1010913
1,500	1060977

Yellow PE Dosing Tank

Usable capacity l	Order no.
35	1003818
60	1003819
100	1003820
140	1003821
250	1023178
500	1003823
1,000	1010914
1,500	1060978

Red PE Dosing Tank

Usable capacity l	Order no.
35	1003824
60	1003825
100	1003826
140	1003827
250	1023179
500	1003829
1,000	1010915
1,500	1060979

Dosing tanks without ProMinent® logo are available on request.

2.1 PE Metering Tanks and Collecting Pans

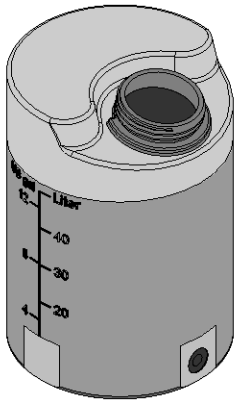

P_DO_0022_SW1

Natural/transparent PE dosing tank with flat mounting surface

Usable capacity	D	H	Threaded bush for metering pumps	Weight	Order no.
l	mm	mm		kg	
35	350	485	without threaded bushes	3.5	791993
60	410	590	without threaded sockets	5.0	1061060
100	500	760	without threaded sockets	7.0	1008599
250	650	1,100	without threaded sockets	17.5	1061061

Your benefits

- "Natural/transparent PE dosing tank" design without sintered threaded socket
- Level mounting surface for the installation of metering pumps on the storage tank
- Additional installation of a manual or electric stirrer is possible

2.1 PE Metering Tanks and Collecting Pans

2.1.2 PE Stackable Collecting Pans for Dosing Tanks

Made of UV-stabilised polyethylene in a stackable design with ProMinent® logo. 2 flat sides for fixing the collecting pan.

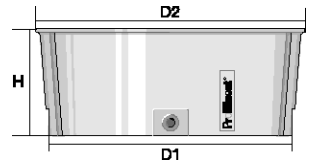

pk_3_019

Colourless/Transparent PE Stackable Collecting Pans

Usable capacity	D2	D1	H	Weight	Order no.
l	mm	mm	mm	kg	
35	565	507	220	3.0	1010879
60	680	607	270	4.3	1010880
100	802	727	320	6.5	1010881
140	811	727	370	7.0	1010882
250	917	807	520	11.0	1010883
500	1,155	1,009	670	16.0	1010884

Black PE Stackable Collecting Pans

Usable capacity	D2	D1	H	Weight	Order no.
l	mm	mm	mm	kg	
35	565	507	220	3.0	1010885
60	680	607	270	4.3	1010886
100	802	727	320	6.5	1010887
140	811	727	370	7.0	1010888
250	917	807	520	11.0	1010889
500	1,155	1,009	670	16.0	1010890

Blue PE Stackable Collecting Pans

Usable capacity	D2	D1	H	Weight	Order no.
l	mm	mm	mm	kg	
35	565	507	220	3.0	1010891
60	680	607	270	4.3	1010892
100	802	727	320	6.5	1010893
140	811	727	370	7.0	1010894
250	917	807	520	11.0	1010895
500	1,155	1,009	670	16.0	1010896

Yellow PE Stackable Collecting Pans

Usable capacity	D2	D1	H	Weight	Order no.
l	mm	mm	mm	kg	
35	565	507	220	3.0	1010897
60	680	607	270	4.3	1010898
100	802	727	320	6.5	1010899
140	811	727	370	7.0	1010900
250	917	807	520	11.0	1010901
500	1,155	1,009	670	16.0	1010902

2.1 PE Metering Tanks and Collecting Pans

Red PE Stackable Collecting Pans

Usable capacity	D2	D1	H	Weight	Order no.
l	mm	mm	mm	kg	
35	565	507	220	3.0	1010903
60	680	607	270	4.3	1010904
100	802	727	320	6.5	1010905
140	811	727	370	7.0	1010906
250	917	807	520	11.0	1010907
500	1,155	1,009	670	16.0	1010908

An R 3/4" threaded sleeve is moulded on 35-500 litre collecting pans for drainage, which requires drilling (Ø 10 mm) on site if necessary. An R 3/4" PE sealing stopper with a seal is screwed in (Accessory part no. 200692).

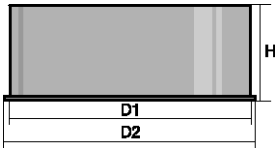

pk_3_018a

Natural PE Collecting Pan

Usable capacity	D2	D1	H	Weight	Order no.
l	mm	mm	mm	kg	
1,000	1,280	1,200	980	34.0	740719
1,500	1,410	1,350	1,280	42.0	1060980

Black PE Collecting Pan

Usable capacity	D2	D1	H	Weight	Order no.
l	mm	mm	mm	kg	
1,000	1,280	1,200	980	34.0	740726
1,500	1,410	1,350	1,280	42.0	1060981

2.1.3 Spare Parts

	Order no.
Push cap for 35 l tank	740708
Screw cap with seal for 60/100/140/250	1031429
Screw cap with seal for 500/1000	1030910
Sealing stopper with 3/4" PE seal	200692
Sealing stopper with 1 1/4" PE seal	1061779

2.2 Accessories for Metering Tanks

2.2.1 Fittings and Detachable Parts

Attachment of pumps to dosing tanks

PP mounting plate

For mounting metering pumps onto metering tanks (including screws for attachment of mounting plates to the metering tank).

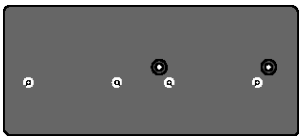

pk_3_003

	Order no.
Mounting plate, Sigma/ 1/ 2/ 3	740476
Mounting plate, alpha	790850
Mounting plate for Beta®, gamma/ X	801575
Mounting plate 3 x gamma/ X, 3 x Beta®	801580
Mounting plate 2 x gamma/ X, 2 x Beta®	801583

Please refer to the following table for the order numbers for the mounting plates.

Metering pumps	Dosing tanks 35 l	60 l	100 l	140 l	250 l	500 l	1000 l/1500 l
alpha	790850	790850	x	x	x	2x790850	2x790850
Beta®, gamma/ X	801575	x	x	x	x	2x	2x
delta®	-	801569	801569	801569	x	2x	2x
Sigma/ 1	-	801569	740476	740476	x	2x	2x
Sigma/ 2, Sigma/ 3	-	-	-	-	x	2x740476	2x
2xBeta® or 2xgamma/ X	-	801583	801583	801583	801583	2x801583	2x801583
3xBeta® or 3xgamma/ X	-	-	801580	801580	801580	2x801580	2x801580

- x = Direct installation of a pump on a storage tank
- 2x = Direct installation of 2 pumps on a storage tank
- - = Pump cannot be installed on the storage tank

Tank connectors with PE plugs

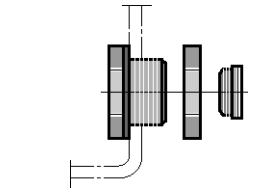

pk_3_004

	Order no.
R 1/2" as an additional connection for PE metering tanks 35-1,000 l	809755
R 3/4" as an additional connection for PE metering tanks 35-1,000 l	809756

PP discharge tap

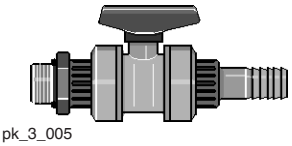

pk_3_005

	Order no.
For metering tanks with d 20, Ø 20 mm hose nozzle and 3/4'' nipple for direct connection to the threaded connector on the tank.	809714

PVC discharge tap

	Order no.
For metering tanks with d 16, Ø 16 mm hose nozzle and 3/4'' nipple for direct connection to the threaded connector on the tank.	809745

Screw cap lock

	Order no.
Lock with key for screw cap	200683

2.2 Accessories for Metering Tanks

2.2.2 Stirrers

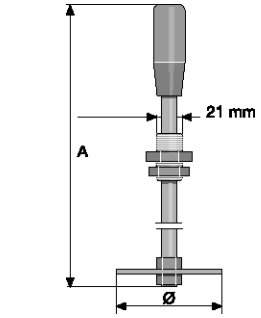

pk_3_009

PP Hand mixer

Fully assembled.

	A mm	Ø mm	Order no.
for 35 und 60 l storage tanks	515	90	741118
for 100 and 140 l tanks	715	90	741119
for 250 and 500 l tanks	1,040	130	741120

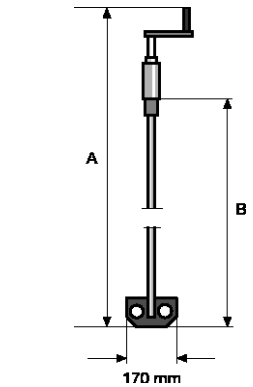

pk_3_007

PP Hand stirrer

With crank, fully assembled

	A mm	B mm	Order no.
for 60 l tanks	670	465	914701
for 100 l tanks	855	650	914738
for 140 l tanks	965	765	914702
for 250 and 500 l tanks	1,175	965	914703
for 1000 l tanks	1,240	1,040	914705

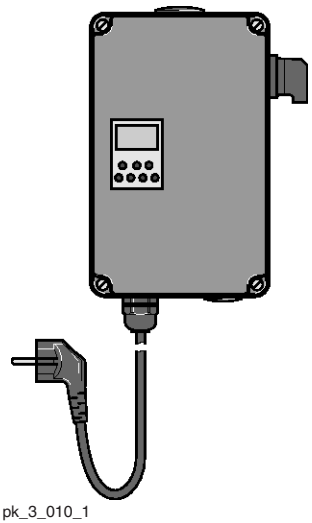
pk_3_010_1

Timer with digital clock

	Order no.
In plastic housing for the control of a stirrer or a metering pump, 230 V, 50 Hz, max. 6A, IP 65. Day and week programs, shortest switching time 1 min. with 2 m power cable and euro plug.	1005561

Stirrers should only be operated via the motor protection switch!

2.2 Accessories for Metering Tanks

Electric stirrers for dosing tanks

For the batching and mixing of liquids up to max. 500 mPas viscosity. Intermittent operation using timer recommended.

- Wide-range motor with insulation class F, insulated for use in hot climates
- Stainless steel or plastic-coated shaft
- Polypropylene propeller
- Provide a motor protection switch for all stirrers.
- Not suitable for gaseous media

Stainless steel electric stirrer

For tank	Power uptake W	Shaft	Propeller	Weight kg	Order no.
60 l	20	1.4571	PP	2.9	818576
100 l	180	1.4571	PP	3.0	1001566
140 l	180	1.4571	PP	7.3	791502
250 l	180	1.4571	PP	7.3	791503
500 l	250	1.4571	PP	8.5	791504
1000 l l	750	1.4571	PP	18.0	791458
1500 l	1,100	1.4535	PP	22.0	1061200

Chemical resistant electric stirrer

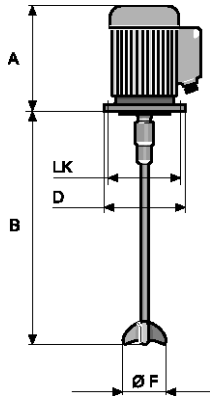

pk_3_008

Size	A	B	Ø D	Ø LK	Ø F
60	195	490	115	100	70
100	200	675	160	130	70
140	200	780	160	130	70
250	200	950	160	130	70
500	200	950	160	130	70
1000	230	1190	200	165	130
1500	282	1400	200	165	175

For tank	Power uptake W	Shaft	Propeller	Weight kg	Order no.
60 l	20	1.4571/PVDF	PP	2.9	818577
100 l	180	1.4571/PVDF	PP	3.0	1002035
140 l	180	1.4571/PVDF	PP	7.3	791454
250 l	180	1.4571/PVDF	PP	7.3	791455
500 l	250	1.4571/PVDF	PP	8.5	791456
1000 l	750	1.4571/PVDF	PP	18.0	791457
1500 l	1,100	Steel/PE	PP	22.0	1061201

Technical Data

For tank	Capacity	Voltage (50 Hz)	Nominal current (50 Hz)	Speed (50 Hz)	Enclosure rating
60 l	0,02 kW	1 pH, 230 V	0,38 A	1400	IP55
100 l	0,18 kW	1 pH, 230 V	1,9 A	1440	IP55
140 l	0,18 kW	1 pH, 230 V	1,9 A	1440	IP55
250 l	0,18 kW	1 pH, 230 V	1,9 A	1440	IP55
500 l	0,25 kW	1 pH, 230 V	1,8 A	1440	IP55
1000 l	0,75 kW	3 pH, 230/400 V	2,96/1,71 A	1440	IP55
1500 l	1,1 kW	3 pH, 230/400 V	4,5/2,6 A	1500	IP55

2.3 Eccentric Screw Pump Spectra

2.3.1 Eccentric Screw Pump Spectra for Pumping Polymer Solutions

Pump ultra-gently, meter precisely and with a wealth of applications.

Capacity range 2.4 – 12,000 l/h, 12 – 3 bar

The eccentric screw pump Spectra meters liquid polyelectrolytes in concentrated and dilute form. It can be used, for example, in waste water treatment or sludge dewatering.

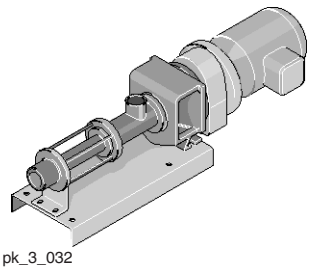

pk_3_032

The eccentric screw pump Spectra has been designed for the transport of polymer solutions with a viscosity of up to 5,000 mPas. It is low-maintenance and can even be used if polymer solutions containing oil are to be metered.

The pumps are equipped with gear motors and external fans and can be operated via an external frequency converter. Protect the pump from running dry.

Your benefits

- Low-pulsation pumping
- Feed rate is proportional to the speed
- Reversible pumping direction

Technical details

- FKM stator
- Stainless steel (Cr-Ni-Mo 17-12-2) rotor
- Stainless steel housing for 12/2 - 12/100
- Grey cast iron housing for 6/300 - 3/12000
- Axial face seal
- Voltage: 3-phase, 230/400 VAC
- Degree of protection: IP55

Field of application

Waste water treatment, sludge dewatering

The frequency converters do not form part of the Spectra scope of supply.

Without base plate

	Delivery rate at 3 bar	Maximum back pressure bar	Power uptake kW	Order no.
Spectra 12/2 F	0.24…2.4 l/h	12	0.37	1025284
Spectra 12/13 F	1.3…13.2 l/h	12	0.37	1025285
Spectra 12/33 F	3.3…33 l/h	12	0.37	1025286
Spectra 12/100 F	10…100 l/h	12	0.37	1025287
Spectra 6/300 F	30…300 l/h	6	0.37	1025288
Spectra 6/650 F	65…650 l/h	6	0.55	1025289
Spectra 5/1400 F	140…1,400 l/h	5	0.75	1025290
Spectra 3/3000 F	300…3,000 l/h	3	0.75	1025291
Spectra 3/6500 F	650…6,500 l/h	3	1.50	1025292
Spectra 3/12000 F	1,200…12,000 l/h	3	2.20	1025293

With base plate

	Delivery rate at 3 bar	Maximum back pressure bar	Power uptake kW	Order no.
Spectra 12/2 FB	0.24…2.4 l/h	12	0.37	1025294
Spectra 12/13 FB	1.3…13.2 l/h	12	0.37	1025295
Spectra 12/33 FB	3.3…33 l/h	12	0.37	1025296
Spectra 12/100 FB	10…100 l/h	12	0.37	1025297
Spectra 6/300 FB	30…300 l/h	6	0.37	1025298
Spectra 6/650 FB	65…650 l/h	6	0.55	1025299
Spectra 5/1400 FB	140…1,400 l/h	5	0.75	1025300
Spectra 3/3000 FB	300…3,000 l/h	3	0.75	1025301
Spectra 3/6500 FB	650…6,500 l/h	3	1.50	1025302
Spectra 3/12000 FB	1,200…12,000 l/h	3	2.20	1025303



2.3 Eccentric Screw Pump Spectra

Frequency Converters for Spectra

		Recommended for pumps up to	Order no.
SK500E – 550	0.55 kW, 1 ph, 230 V, incl. control panel	0.37 kW	1010980
SK500E – 750	0.75 kW, 1 ph, 230 V, incl. control panel	0.55 kW	1010981
SK500E – 111	1.10 kW, 1 ph, 230 V, incl. control panel	0.75 kW	1025304
SK500E – 151	1.50 kW, 1 ph, 230 V, incl. control panel	1.10 kW	1010982
SK500E – 221	2.20 kW, 3 ph, 400 V, incl. control panel	2.20 kW	1025305

The frequency converters do not form part of the Spectra scope of supply.

Motor Data

Electrical connection	Frequency	Enclosure rating	Overheating protection	Cooling
230/400 VAC, 3 ph	4 - 89 Hz	IP 55	3 PTC thermistors in winding	external fan 1~, 230 VAC, 50 Hz

Technical Data

	Weight kg	Dimensions L x W x H (mm)	Housing material	Material rot. parts	Suction/discharge connection
Spectra 12/2 F	24	739 x 200 x 182	Cr Ni Mo 17 – 12 – 2	Cr Ni Mo 17 – 12 – 2	1/2″, female
Spectra 12/13 F	24	739 x 200 x 182	Cr Ni Mo 17 – 12 – 2	Cr Ni Mo 17 – 12 – 2	1/2″, female
Spectra 12/33 F	24	739 x 200 x 182	Cr Ni Mo 17 – 12 – 2	Cr Ni Mo 17 – 12 – 2	1/2″, female
Spectra 12/100 F	24	739 x 200 x 182	Cr Ni Mo 17 – 12 – 2	Cr Ni Mo 17 – 12 – 2	1/2″, female
Spectra 6/300 F	26	874 x 223 x 192	Grey cast iron	Cr Ni Mo 17 – 12 – 2	1 1/4″, female
Spectra 6/650 F	26	874 x 223 x 192	Grey cast iron	Cr Ni Mo 17 – 12 – 2	1 1/4″, female
Spectra 5/1400 F	26	874 x 223 x 192	Grey cast iron	Cr Ni Mo 17 – 12 – 2	1 1/4″, female
Spectra 3/3000 F	36	950 x 223 x 193	Grey cast iron	Cr Ni Mo 17 – 12 – 2	1 1/4″, female
Spectra 3/6500 F	56	1,172 x 237 x 224	Grey cast iron	Cr Ni Mo 17 – 12 – 2	DN 50, flange
Spectra 3/12000 F	81	1,487 x 264 x 244	Grey cast iron	Cr Ni Mo 17 – 12 – 2	DN 65, flange
Spectra 12/2 FB	28	739 x 220 x 232	Cr Ni Mo 17 – 12 – 2	Cr Ni Mo 17 – 12 – 2	1/2″, female
Spectra 12/13 FB	28	739 x 220 x 232	Cr Ni Mo 17 – 12 – 2	Cr Ni Mo 17 – 12 – 2	1/2″, female
Spectra 12/33 FB	28	739 x 220 x 232	Cr Ni Mo 17 – 12 – 2	Cr Ni Mo 17 – 12 – 2	1/2″, female
Spectra 12/100 FB	28	739 x 220 x 232	Cr Ni Mo 17 – 12 – 2	Cr Ni Mo 17 – 12 – 2	1/2″, female
Spectra 6/300 FB	33	874 x 230 x 242	Grey cast iron	Cr Ni Mo 17 – 12 – 2	1 1/4″, female
Spectra 6/650 FB	33	874 x 230 x 242	Grey cast iron	Cr Ni Mo 17 – 12 – 2	1 1/4″, female
Spectra 5/1400 FB	33	874 x 230 x 242	Grey cast iron	Cr Ni Mo 17 – 12 – 2	1 1/4″, female
Spectra 3/3000 FB	44	950 x 230 x 242	Grey cast iron	Cr Ni Mo 17 – 12 – 2	1 1/4″, female
Spectra 3/6500 FB	67	1,172 x 237 x 274	Grey cast iron	Cr Ni Mo 17 – 12 – 2	DN 50, flange
Spectra 3/12000 FB	96	1,487 x 265 x 294	Grey cast iron	Cr Ni Mo 17 – 12 – 2	DN 65, flange



2.3 Eccentric Screw Pump Spectra

2.3.2 Spare Parts

	Order no.
Stator FKM for Spectra 12/2	1025306
Stator FKM for Spectra 12/13	1025307
Stator FKM for Spectra 12/30, 12/33	1025308
Stator made of FKM for Spectra 12/100	1025309
Stator FKM for Spectra 6/300, 6/650	1025310
Stator FKM for Spectra 5/1400	1025312
Stator FKM for Spectra 3/3000	1025313
Stator made of FKM for Spectra 3/6500	1025314
Stator FKM for Spectra 3/12000	1025315
Rotor Cr Ni Mo 17-12-2 for Spectra 12/2	1025316
Rotor Cr Ni Mo 17-12-2 for Spectra 12/13	1025317
Rotor Cr Ni Mo 17-12-2 for Spectra 12/30, 12/33	1025318
Rotor made of Cr Ni Mo 17-12-2 for Spectra 12/100	1025319
Rotor Cr Ni Mo 17-12-2 for Spectra 6/300, 6/650	1025320
Rotor Cr Ni Mo 17-12-2 for Spectra 5/1400	1025322
Rotor Cr Ni Mo 17-12-2 for Spectra 3/3000	1025323
Rotor made of Cr Ni Mo 17-12-2 for Spectra 3/6500	1025324
Rotor Cr Ni Mo 17-12-2 for Spectra 3/12000	1025325
Spare parts kit for axial face seal for Spectra 12/2 - 12/100	1025326
Spare parts kit for mech. seal for Spectra 6/300 - 5/1400	1025330
Spare parts kit for mech. seal for Spectra 3/3000	1025333
Spare parts kit for axial face seal for Spectra 3/6500	1025334
Spare parts kit for mech. seal for Spectra 3/12000	1025335
Spare parts kit for pin joint for Spectra 12/2 - 12/100	1025346
Pin joints spare parts kit for Spectra 6/300 - 5/1400	1025350
Pin joints spare parts kit for Spectra 3/3000	1025353
Spare parts kit for pin joint for Spectra 3/6500	1025354
Pin joints spare parts kit for Spectra 3/12000	1025355



2.4 Centrifugal Pump von Taine®

2.4.1 Centrifugal Pump von Taine®

The safe and high-quality solution when liquid media need to be pumped leak-free.

Capacity range up to 22,500 l/h, discharge lift up to 23.5 mWC

The solenoid-coupled centrifugal pump vonTaine® for the pumping of liquid media works safely and reliably: liquid media are pumped leak-free.

The von Taine® pump is a solenoid-coupled centrifugal pump. Thanks to the solenoid coupling, the pump transports the liquid medium from storage tank to storage tank without any leaks or even from a tank to a discharge line. The von Taine® centrifugal pump transports media at up to 22,500 l/h and up to a discharge lift of 23.5 metres. As the pump capacity is highly dependent on the back pressure, always observe the performance curve.

Important note

Check the material tolerability when selecting your pump. Take into consideration the density, viscosity and temperature of the medium to be transported. Please also note: The transported media should not contain any solid fractions. The pump is not self-priming and requires a feed.

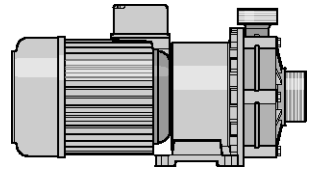

pk_3_026

Your benefits

- Safe and reliable: Leak-free pumping of liquid chemicals
- Coupling between motor and impeller via magnetic coupling

Technical details

- Pump head made of PP or PVDF
- FKM or EPDM seal
- The pump is not self-priming and requires a feed
- Protect the pump from running dry
- Hydraulic connectors with pipe threading as per DIN ISO 228-1

Field of application

Leak-free pumping of liquid chemicals

von Taine®, PP/FKM Version

	Feed rate at max. pressure l/h	Feed lift max. m	Power uptake kW	Voltage/ frequency	Weight	Order no.
von Taine® 0502 PP/FKM	1,800	4.5	0.06	1~/230 V/50 Hz	2.7 kg	1023089
von Taine® 0807 PP/FKM	6,600	7.9	0.25	3~/400 V/50 Hz	5.0 kg	1023090
von Taine® 1010 PP/FKM	9,600	10.0	0.37	3~/400 V/50 Hz	7.6 kg	1023091
von Taine® 1313 PP/FKM	13,200	13.2	0.65	3~/400 V/50 Hz	8.7 kg	1023092
von Taine® 1820 PP/FKM	19,500	18.1	1.10	3~/400 V/50 Hz	16.0 kg	1023093
von Taine® 2323 PP/FKM	22,500	23.5	1.50	3~/400 V/50 Hz	17.0 kg	1023094

von Taine®, PVDF/FKM Version

	Feed rate at max. pressure l/h	Feed lift max. m	Power uptake kW	Voltage/ frequency	Weight	Order no.
von Taine® 0502 PVDF/FKM	1,800	4.5	0.06	1~/230 V/50 Hz	2.8 kg	1023095
von Taine® 0807 PVDF/FKM	6,600	7.9	0.25	3~/400 V/50 Hz	5.2 kg	1023096
von Taine® 1010 PVDF/FKM	9,600	10.0	0.37	3~/400 V/50 Hz	8.0 kg	1023097
von Taine® 1313 PVDF/FKM	13,200	13.2	0.65	3~/400 V/50 Hz	9.0 kg	1023098
von Taine® 1820 PVDF/FKM	19,500	18.2	1.10	3~/400 V/50 Hz	16.7 kg	1023099
von Taine® 2323 PVDF/FKM	22,500	23.5	1.50	3~/400 V/50 Hz	17.7 kg	1023100



2.4 Centrifugal Pump von Taine®

von Taine®, PP/EPDM Version

	Feed rate at max. pressure l/h	Feed lift max. m	Power uptake kW	Voltage/ frequency	Weight	Order no.
von Taine® 0502 PP/EPDM	1,800	4.5	0.06	1~/230 V/50 Hz	2.7 kg	1028551
von Taine® 0807 PP/EPDM	6,600	7.9	0.25	3~/400 V/50 Hz	5.0 kg	1028552
von Taine® 1010 PP/EPDM	9,600	10.0	0.37	3~/400 V/50 Hz	7.6 kg	1028553
von Taine® 1313 PP/EPDM	13,200	13.2	0.65	3~/400 V/50 Hz	8.7 kg	1028564
von Taine® 1820 PP/EPDM	19,500	18.1	1.10	3~/400 V/50 Hz	16.0 kg	1028565
von Taine® 2323 PP/EPDM	22,500	23.5	1.50	3~/400 V/50 Hz	17.0 kg	1028566

von Taine®, PVDF/EPDM Version

	Feed rate at max. pressure l/h	Feed lift max. m	Power uptake kW	Voltage/ frequency	Weight	Order no.
von Taine® 0502 PVDF/EPDM	1,800	4.5	0.06	1~/230 V/50 Hz	2.8 kg	1028567
von Taine® 0807 PVDF/EPDM	6,600	7.9	0.25	3~/400 V/50 Hz	5.2 kg	1028568
von Taine® 1010 PVDF/EPDM	9,600	10.0	0.37	3~/400 V/50 Hz	8.0 kg	1028569
von Taine® 1313 PVDF/EPDM	13,200	13.2	0.65	3~/400 V/50 Hz	9.0 kg	1028570
von Taine® 1820 PVDF/EPDM	19,500	18.1	1.10	3~/400 V/50 Hz	16.7 kg	1028571
von Taine® 2323 PVDF/EPDM	22,500	23.5	1.50	3~/400 V/50 Hz	17.7 kg	1028572

Parameters For Use

	Medium temperature max. °C	Maximum density kg/dm³	Max. viscosity mPas	Max. system pressure at 20° C bar
von Taine® 0502 PP	80	1.25…1.35	20	1.0
von Taine® 0807 PP	80	1.20…1.80	20	2.5
von Taine® 1010 PP	80	1.60…2.00	20	2.5
von Taine® 1313 PP	80	1.60…1.90	20	2.5
von Taine® 1820 PP	80	1.10…1.80	20	5.0
von Taine® 2323 PP	80	1.00…2.00	20	5.0
von Taine® 0502 PVDF	95	1.25…1.35	20	1.0
von Taine® 0807 PVDF	95	1.20…1.80	20	2.5
von Taine® 1010 PVDF	95	1.60…2.00	20	2.5
von Taine® 1313 PVDF	95	1.60…1.90	20	2.5
von Taine® 1820 PVDF	95	1.10…1.80	20	5.0
von Taine® 2323 PVDF	95	1.00…2.00	20	5.0



2.4 Centrifugal Pump von Taine®

Characteristic Curves

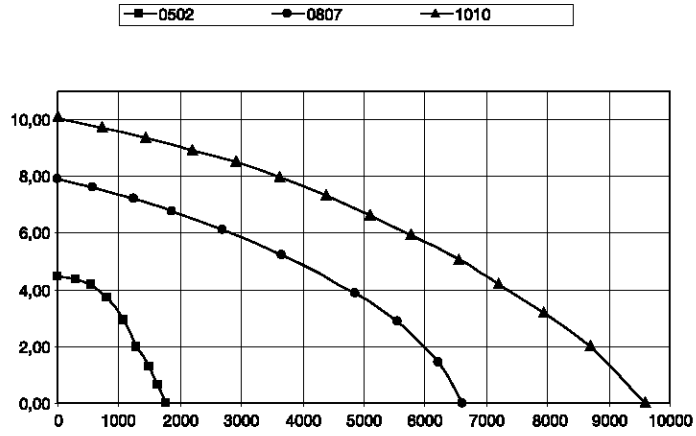

pk_2_080_1

Delivered quantity [l/h] as a function of the delivery head [mWC]

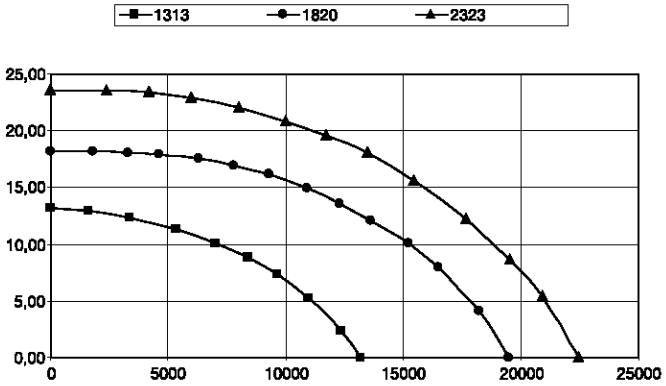

pk_2_115

Delivered quantity [l/h] as a function of the delivery head [mWC]

2.4 Centrifugal Pump von Taine®

Dimensions

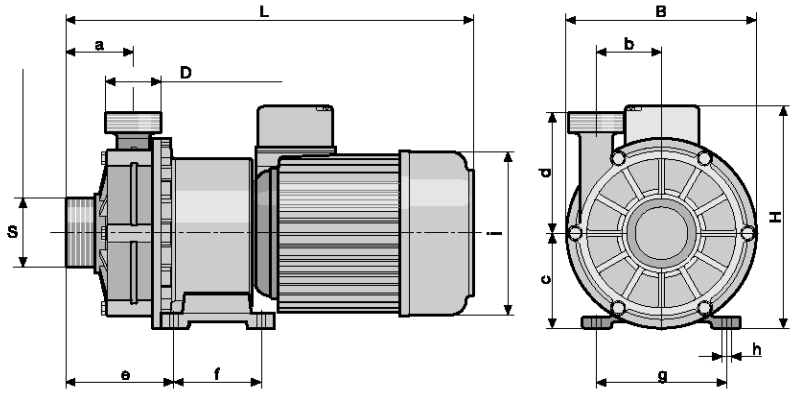

pk_3_027

		von Taine® 0502 PVDF	von Taine® 0807 PVDF	von Taine® 1010 PVDF	von Taine® 1313 PVDF	von Taine® 1820 PVDF	von Taine® 2323 PVDF
Discharge connector (D)		G1″	G1 1/4″	G1 1/2″	G1 1/2″	G2″	G2″
Suction connector (S)		G1 1/4″	G1 1/4″	G2″	G2″	G2 1/4″	G2 1/4″
L	mm	240	283	346	350	455	455
B	mm	120	138	163	163	205	205
H	mm	145	185	181	191	216	216
a	mm	37.0	45.0	58.5	58.5	70.0	70.0
b	mm	29.5	29.5	56.0	56.0	70.0	70.0
c	mm	60.0	70.0	82.0	82.0	104.5	104.5
d	mm	65.5	86.0	104.0	104.0	134.5	134.5
e	mm	129	50	106	106	115	115
f	mm	78	71	74	74	100	100
g	mm	91	91	114	114	130	130
h	mm	6.5	8.5	8.5	8.5	10.0	10.0
i	mm	92	135	136.5	135	160	160
Enclosure rating		IP 55	IP 55	IP 55	IP 55	IP 55	IP 55
Min. flow	l/h	30	60	60	60	90	120

2.4 Centrifugal Pump von Taine®

2.4.2 Spare Parts Kits

	Order no.
PP/FKM liquid end for von Taine® 0502	1023978
PP/FKM liquid end forr von Taine® 0807	1023979
PP/FKM liquid end for von Taine® 1010	1023980
PP/FKM liquid end for von Taine® 1313	1023981
PP/FKM liquid end for von Taine® 1820	1023982
PP/FKM liquid end for von Taine® 2323	1023983
PVDF/FKM liquid end for von Taine® 0502	1023994
PVDF/FKM liquid end for von Taine® 0807	1023995
PVDF/FKM liquid end for von Taine® 1010	1023996
PVDF/FKM liquid end for von Taine® 1313	1023997
PVDF/FKM liquid end for von Taine® 1820	1023998
PVDF/FKM liquid end for von Taine® 2323	1023999

	Order no.
PP/EPDM liquid end for von Taine® 0502	1028573
PP/EPDM liquid end for von Taine® 0807	1028574
PP/EPDM liquid end forvon Taine® 1010	1028575
PP/EPDM liquid end for von Taine® 1313	1028576
PP/EPDM liquid end for von Taine® 1820	1028577
PP/EPDM liquid end for von Taine® 2323	1028578
PVDF/EPDM liquid end for von Taine® 0502	1028579
PVDF/EPDMliquid end for von Taine® 0807	1028580
PVDF/EPDM liquid end for von Taine® 1010	1028581
PVDF/EPDM liquid end for von Taine® 1313	1028582
PVDF/EPDM liquid end for von Taine® 1820	1028583
PVDF/EPDM liquid end for von Taine® 2323	1028584

	Order no.
Motor for von Taine® 0502	1024000
Motor for von Taine® 0807	1024001
Motor for von Taine® 1010	1024002
Motor for von Taine® 1313	1024003
Motor for von Taine® 1820	1024004
Motor for von Taine® 2323	1024005

2.5 Air-Operated Diaphragm Pump Duodos

2.5.1 Air-operated Diaphragm Pump Duodos

Duodos pumps are air-driven double diaphragm transfer pumps. No electrical components are required.

Capacity range up to 6,700 l/h, discharge lift up to 70 mWC

Air-operated Diaphragm Pump Duodos for pumping liquid media.

The pump capacity of the pump can be controlled by changing the pressure in the air supply. The air control is designed for oil-free operation. Duodos pumps are ideally suited for the transport of liquid chemicals. Duodos pumps transport media at up 6,700 l/h and up to a discharge lift of 70 m. As the pump capacity is highly dependent on the back pressure, the performance curve must always be observed. At the same time, the differential pressure between the hydraulic and pneumatic sides should not exceed 2 bar. Higher values reduce the service life of the pump. When selecting pumps, check the material compatibility. In addition, consider the density, viscosity and temperature of the transported medium.

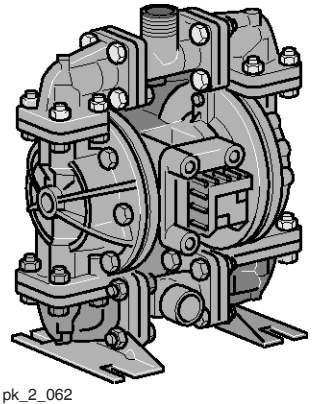

pk_2_062

Your benefits

- No electrical components are required because the pumps are air-operated
- Duodos pumps are run-dry safe and self-priming

Technical details

- Maximum air pressure 7 bar
- The air control is designed for oil-free operation
- If the back pressure is greater than the air pressure in the pump, the pump remains stationary

Field of application

- Pumping of liquid chemicals

The following materials are available:

- PP pump chambers with Santoprene® diaphragms and valves
- PVDF pump chambers with PTFE diaphragms and valves

Duodos PP

	Housing material	Diaphragms/ valves	Delivery rate (2 bar differential pressure) l/h	Order no.
Duodos 10 PP	PP	Santoprene®	0…650*	1010793
Duodos 15 PP	PP	Santoprene®	0…2,000*	1010794
Duodos 20 PP	PP	Santoprene®	0…3,000*	1010795
Duodos 25 PP	PP	Santoprene®	0…6,700*	1010796

* Delivery rate at a differential pressure of 2 bar (0.5 bar back pressure, 2.5 bar air pressure).

Santoprene® is a registered trademark of the Monsanto Corporation.

Duodos PVDF

	Housing material	Diaphrag-ms/valves	Delivery rate (2 bar differential pressure) l/h	Order no.
Duodos 10 PVDF	PVDF	Teflon	0…650*	1010797
Duodos 15 PVDF	PVDF	Teflon	0…2,000*	1010798
Duodos 20 PVDF	PVDF	Teflon	0…3,000*	1010799
Duodos 25 PVDF	PVDF	Teflon	0…6,700*	1010800

* Delivery rate at a differential pressure of 2 bar (0.5 bar back pressure, 2.5 bar air pressure).

2.5 Air-Operated Diaphragm Pump Duodos

Parameters For Use

	Min. temperature °C	Max. temperature °C	Max. viscosity mPas
Duodos 10 PP	5	65	200
Duodos 10 PVDF	-13	93	200
Duodos 15 PP	5	65	200
Duodos 15 PVDF	-13	93	200
Duodos 20 PP	5	65	200
Duodos 20 PVDF	-13	93	200
Duodos 25 PP	5	65	200
Duodos 25 PVDF	-13	93	200

Characteristic Curves

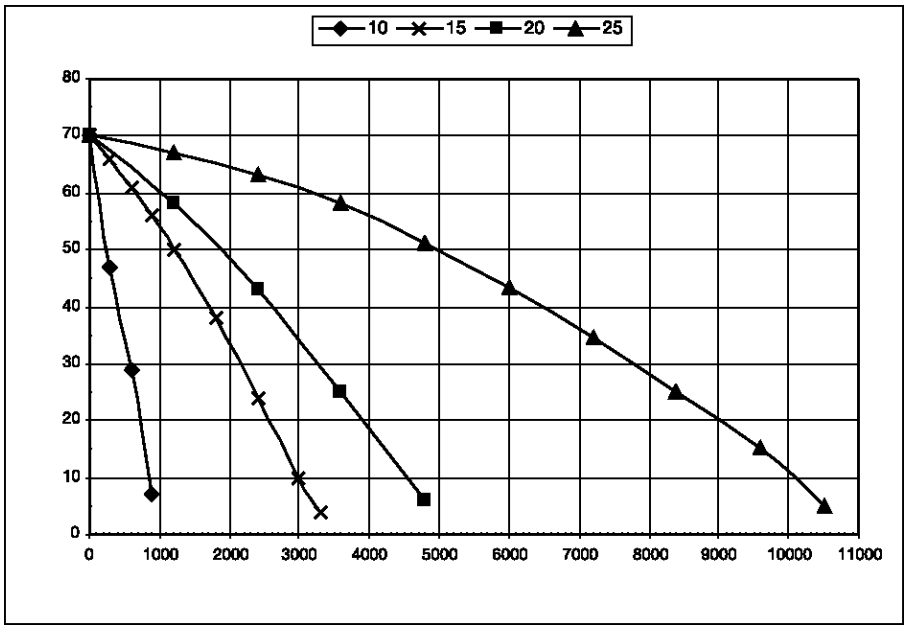

pk_2_114

Feed lift [m WC] over feed rate [l/h] at 7 bar air supply

2.5.2 Spare Parts Kits

Spare part kits for pneumatics comprising

- Seals
- O-rings
- Clamp collars
- Air control valve

	Order no.
Spare parts kit, pneumatics for Duodos 10 PP/PVDF	1010810
Spare parts kit, pneumatics for Duodos 15/20 PP/PVDF	1010811
Spare parts kit, pneumatics for Duodos 25 PP/PVDF	1010813

Spare part kits for the liquid end comprising

- Diaphragms
- Valve balls
- Seals

2.5 Air-Operated Diaphragm Pump Duodos

	Order no.
Spare parts kit, liquid end for Duodos 10 PP	1010801
Spare parts kit, liquid end for Duodos 15 PP	1010802
Spare parts kit, liquid end for Duodos 20 PP	1010803
Spare parts kit, liquid end for Duodos 25 PP	1010804
Spare parts kit, liquid end for Duodos 10 PVDF	1010806
Spare parts kit, liquid end for Duodos 15 PVDF	1010807
Spare parts kit, liquid end for Duodos 20 PVDF	1010808
Spare parts kit, liquid end for Duodos 25 PVDF	1010809

Dimensions

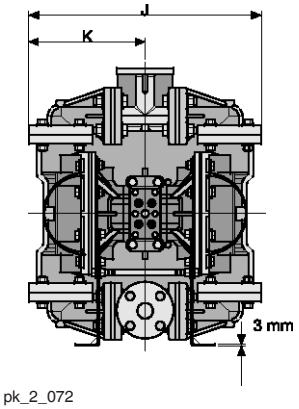

pk_2_072

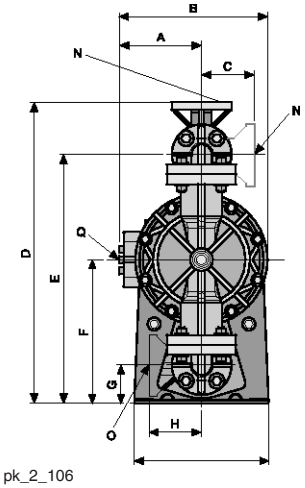

pk_2_106

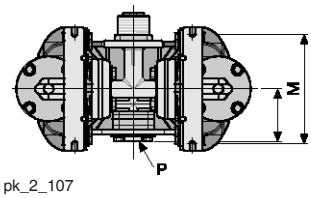

pk_2_107

		Duodos 10	Duodos 15	Duodos 20	Duodos 25
A	mm	79	103	103	172
B	mm	140	179	179	296
C	mm	32	44	60	92
D	mm	198	287	339	527
E	mm	167	243	279	435
F	mm	87	140	163	249
G	mm	19	35	46	64
H	mm	32	44	60	92
I	mm	78	143	143	130
J	mm	178	258	300	433
K	mm	89	129	150	216
L	mm	33	46	57	123
M	mm	66	143	143	102
Discharge connector		1/2″NPT	1″BSP	1 1/2″BSP	1″ANSI flange
Suction connector		1/2″NPT	1″BSP	1 1/2″BSP	1″ANSI flange
Air consumption	m^3/h	0,5…11	3,5…27	7,0…34	8.5…77
Differential pressure	bar	2	2	2	2
Air connection		1/4″NPT	1/4″NPT	1/4″NPT	1/2″NPT
Weight (PP)	kg	2	8	9	24
Weight (PVDF)	kg	2,5	9,0	9,5	29.0

2.6 Barrel Pump DULCO®Trans

2.6.1 Barrel Pump DULCO®Trans

Barrel pumps are the ideal solution for moving liquids.

Pump capacity according to size 900 – 4,800 l/h

The application range of the DULCO®Trans depends on the chemical resistance of the materials used.

DULCO®Trans is used for bottling, draining and transferring liquids from canisters, hobbocks, drums, storage tanks and containers.

Included in the scope of supply: Metering hose with pump nozzle.

Field of application

Barrel pump for bottling, emptying and transferring liquids from canisters, drums and containers.

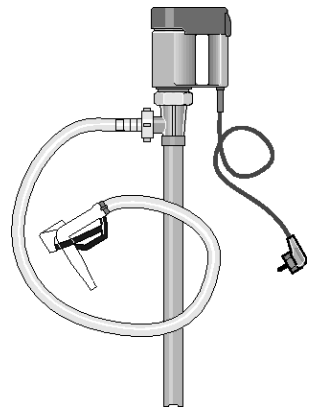

pk_3_029

Materials in Contact With the Medium

The following components come into contact with the liquids:

	PP version	PVDF version
External and internal pipe, tap	Polypropylene	PVDF
Drive shaft	Hastelloy C	Hastelloy C
Rotor	ETFE	ETFE
Mechanical seal	ceramic oxide/PTFE/carbon	ceramic oxide/PTFE/carbon
O-rings	FKM	FKM
Metering hose	PVC	PVC

DULCO®Trans PP Version

	Feed rate max. *	Feed lift max. m	Order no.
DULCO®Trans 25/700 PP	900 l/h *	5.0	1023085
DULCO®Trans 40/1000 PP	3500 l/h *	9.6	1034225
DULCO®Trans 50/1200 PP	4800 l/h *	12.4	1023087

DULCO®Trans PVDF Version

	Feed rate max. *	Feed lift max. m	Order no.
DULCO®Trans 25/700 PVDF	1260 l/h *	5.4	1036145
DULCO®Trans 40/1000 PVDF	3500 l/h *	9.6	1036146
DULCO®Trans 50/1200 PVDF	4800 l/h *	12.4	1036147

* The specified delivery rate includes hose and tap.

Spare parts kit for DULCO®Trans

	Order no.
Spare parts kit for DULCO®Trans 25/700 PP	1024179
Spare parts kit for DULCO®Trans 25/700 PVDF	1036149
Spare parts kit for DULCO®Trans 40/1000 PP/PVDF	1034712
Spare parts kit for DULCO®Trans 50/1200 PP/PVDF	1024181

2.6 Barrel Pump DULCO®Trans

Technical Data

Type		DULCO®Trans 25/700	DULCO®Trans 40/1000	DULCO®Trans 50/1200
Max. density	kg/dm³	1.2	1.5	1.8
Max. viscosity	mPas	150	500	500
Media temperature PP	°C	45	50	50
Media temperature PVDF	°C	60	60	60
Suction pipe outer diameter	mm	25	40	50
Hose connection		d13	d19	d25
Discharge hose		1.5 m, PVC, 13/18 mm	2.0 m, PVC, 19/27 mm	3.0 m, PVC, 25/34 mm
Motor rating	W	230	500	800
Enclosure rating		IP 24	IP 24	IP 24
Voltage/frequency		230 V/1~/50/60Hz	230 V/1~/50/60Hz	230 V/1~/50/60 Hz
Under-voltage cut-out		none	with	with
Overvoltage safety switch		with	with	with
Temperature monitoring		none	with	none
Speed control		2-stage	Continuous	none
Connection cable		5 m, EUR plug	5 m, EUR plug	5 m, EUR plug
Drum adapter		none	G 2"	G 2"
Weight PP/PVDF	kg	2.4/2.6	5.1/5.4	7.4/8.2
Dimensions H x W x D	mm	927 x 197 x 83	1,272 x 185 x 95	1,489 x 217 x 115

Dimensions

Type		DULCO®Trans 25/700	DULCO®Trans 40/1000	DULCO®Trans 50/1200
A	mm	197	185	217
B	mm	83	113	113
C	mm	672	961	1,161
D	mm	700	1,006	1,206
F	mm	25	40	50
G	d	13	19	25
H	mm	927	1,272	1,489

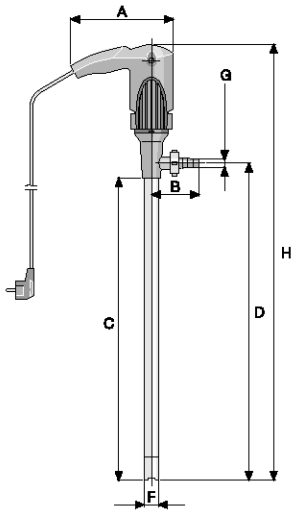

pk_3_028

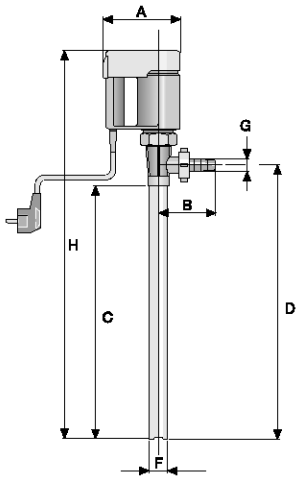

pk_3_029_1

2.7 Rotary Lobe Pumps

2.7.1 Rotary Lobe Pumps

The robust solution for the pumping of viscose media and media containing solids

Capacity range 25–100 m³/h, 10–4 bar

The compact rotary lobe pump pumps viscose and even abrasive media at up to 100 m³/h and also with reversible pumping direction thanks to its valveless construction. Housing, plunger and seals are available in different materials to match the medium.

The rotary lobe pump is robust and surprisingly powerful given its compact dimensions: depending on the model it can pump up to 100 m³/h viscose media and media containing solids, even containing larger particles of solids. It can be used with ease as a self-priming pump with reversible pumping direction. And naturally it is absolutely safe to operate as an intermediate chamber reliably separating the pumped medium from the gear oil.

The carefully selected materials, high-grade workmanship and maintenance-friendly construction make the rotary lobe pump into a low-wear endurance pump. A three-phase motor drives the two rotary pistons via a precision gear perfectly synchronised and thus also quietly. Corresponding drive versions enable the pump to be connected to bus systems and thus integrated into modern production environments.



P_PM_TRF_0003_SW1

Your benefits

- Compact pump with good pump capacity
- Ideal for viscous, abrasive and shear-sensitive media containing solids
- High-grade seals and the reliable separation of gears and medium enhance the pump's operational safety
- Feed rate can be controlled via motor speed
- Connection to bus system is possible
- Low-wear and maintenance-friendly

Technical details

- Pump complete with drive motor, reduction gear system, clutch and base plate
- Housing material AISI-316 or AISI 420, rotary piston and shaft seals made of NBR, EPDM or FKM
- Constant i.e. non-pulsing feed rates
- Valveless construction enables reversed pump direction
- Different versions of power end/drive via three-phase motor (On/Off mode, adjustable motor with integrated frequency converter or external fan)
- Connection to bus system is possible (integrated frequency converter needed)
- Hydraulic connection as standard by means of DIN flange (DN 50, 65, 80, 100, 125), other connectors available
- Simple replacement of wear discs thanks to maintenance-friendly construction

Field of application

- Waste water and sludge pumping
- Food and beverage industry

Rotary Lobe Pumps

	Flange	Max. pump volume	Max. pressure	Weight	Order no.
Type 070	DN 50	25 m³/h	10 bar	80 kg	on request
Type 090	DN 65	35 m³/h	6 bar	85 kg	on request
Type 100	DN 80/100	80 m³/h	8 bar	185 kg	on request
Type 125	DN 100/125	100 m³/h	4 bar	195 kg	on request

2.8 Peristaltic Pump DULCO®flex

2.8.1 Peristaltic Pump DULCO®flex

The virtually universal pump for many applications.

Capacity range up to 15,000 l/h, up to 15 bar

ProMinent® peristaltic pumps operate on a simple functional principle and stand out thanks to their compact and robust design. They are self-priming and operate without seals and valves.

The peristaltic pumps of product range DULCO®flex are ideal for almost all metering and pumping tasks in laboratories and industry. The reason: their extensive pump capacity range and the large number of different hose materials.

This is how they work: The feed chemical is pumped by the rotor clamping the hose in the direction of flow. No valves are needed. Abrasive, viscous and gaseous media can thereby be gently conveyed.

The pumping process is triggered by an elastomer hose, pressed by two rotating rollers or shoes against the pump housing. Once the rollers or shoes have passed by, the hose immediately returns to its original shape and creates a vacuum at the pump inlet. Atmospheric pressure causes the medium to flow in. The feed rate is proportional to the pump speed. A vacuum device can optionally be used to assist the hose to return to its position on product range DFCa and DFDa pumps, improving their suction behaviour and ensuring the even feed of viscose media.

Whereas the pumps are fitted with roller technology for low pressures of up to 8 bar, they have shoes for higher pressures of up to 15 bar.

Your benefits

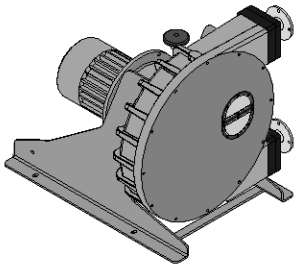

P_DX_0010_SW1

- Simple to operate
- Reversible pumping direction
- Hose materials suitable for various chemicals
- Simple and quick hose change
- Safeguarded against running dry
- Self-priming
- Ideal for pumping pasty, viscous, abrasive and gaseous media

Field of application

Chemical industry, clarification plants, mining

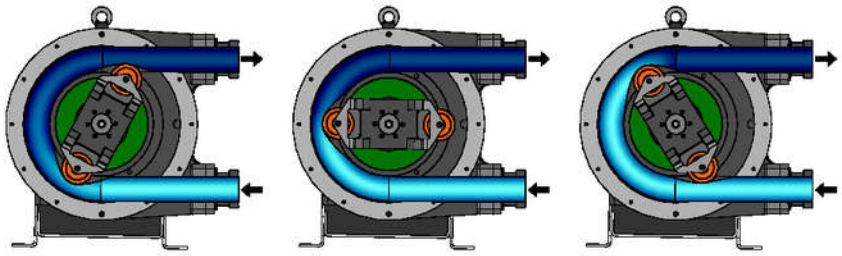

P_DX_0028_SW3

DULCO®flex peristaltic pumps can be used to convey media with the following properties:

- pasty and solid-containing
- viscous
- abrasive
- shear-sensitive
- outgassing
- corrosive

The pumps can be selected with the aid of an identity code:

Overview:

Type	Application	Feed rate at max. pressure l/h	Max. pressure bar	Rollers/shoes
DFAa	Laboratory	105	2	Rollers
DFBa	Industry	650	8	Rollers
DFCa	Industry	8,900	8	Rollers
DFDa	Industry	15,000	15	Shoes

2.8 Peristaltic Pump DULCO®flex

2.8.2 Peristaltic Pump DULCO®flex DFAa

Precise metering of the smallest volumes

Feed rates of up to 105 l/h at 2 bar

The peristaltic pump DULCO®flex DFAa (designed as a low-pressure pump) is suitable for metering the smallest volumes in laboratories.

It can be used for the precise metering of low feed rates of up to 105 l/h at 2 bar. The rotor is equipped with 3 rollers to reduce pulsation. A quick-release connector aids fast hose replacement.

Your benefits

- Simple to operate
- Reversible pumping direction
- Hose materials suitable for various chemicals
- Simple and quick hose change
- Ideal for pumping pasty, high-viscosity, abrasive and gaseous media
- Self-priming
- Safeguarded against running dry

Technical details

- Hose diameter: 3.2 to 8 mm
- Feed rates: 1.6 to 10 ml/rev
- Hose materials: SOLVA, silicone, Norprene A60G, Norprene A60F
- Self-priming up to 8 m
- Back pressure up to 2 bar

Options

- Stainless steel base plate
- Single phase motor
- Two pump heads

Field of application

- Laboratory applications

Technical Data

Hose material	SOLVA, Silikon, Norprene A60G, Norprene A60F
Self-priming	up to 8 m
Rollers / shoes	Rollers

Type	Feed rate / revolution	Delivery rate at max. back pressure		Hose diameter (internal)
	ml/U	bar	l/h	mm
DFAa 003	1.66	2	17.5	3.2
DFAa 008	10	2	105	8.0

2.8 Peristaltic Pump DULCO®flex

DULCO®flex DFAa 003 peristaltic pump

DFAa	Type								
	003	DFAa, with 3.2 mm hose, wall thickness 2.4 mm (1.66 ml/revolution)							
		Drive unit							
		000	without drive unit						
		A10	0.12 kW, 14 rpm, 1.4 l/h, 2 bar (Reduction gear system), 3-phase, 230/400 V AC						
		A11	0.12 kW, 35 rpm, 3.5 l/h, 2 bar (Reduction gear system), 3-phase, 230/400 V AC						
		A12	0.12 kW, 70 rpm, 7.0 l/h, 2 bar (Reduction gear system), 3-phase, 230/400 V AC						
		A13	0.18 kW, 93 rpm, 9.3 l/h, 2 bar (Reduction gear system), 3-phase, 230/400 V AC						
		A14	0.18 kW, 140 rpm, 13.9 l/h, 2 bar (Reduction gear system), 3-phase, 230/400 V AC						
		A21	0.12 kW, 10.9 - 57 rpm, 1,1-5.7 l/h, 2 bar (Manual adjustment gears), 3-phase, 400 V AC						
		A22	0.25 kW, 34 - 176 rpm, 3.4-17.5 l/h, 2 bar (Manual adjustment gears), 3-phase, 400 V AC						
		A31	0.18 kW, 13 - 130 rpm, 1.3-12.9 l/h, 7-70 Hz, 2 bar (Gear motor with integrated frequency converter), 1-phase, 230 V AC						
		A41	0.18 kW, 4 - 105 rpm, 0.4-10.5 l/h, 3-75 Hz, 2 bar (Gear motor, external frequency converter required), 3-phase, 230/400 V AC						
			Hose material						
			B	Norprene A60F (food grade)					
			C	Solva					
			D	Silicone					
				Base plate					
				0	Base plate, painted steel				
				1	Base plate, stainless steel				
					Batch controller				
					0	Without controller			
						Special motor			
						0	Standard (3 phase)		
						D	Single phase motor, 0.12 kW (only for A10-A13)		
						E	Single phase motor, 0.18 kW (only for A14, A15)		
							Pump head		
							0	with one pump head	
								Approvals	
								01	CE

DULCO®flex DFAa 008 peristaltic pump

DFAa	Type								
	008	DFAa with 8.0 mm hose, wall thickness 2.4 mm (10 ml/revolution)							
		Drive unit							
		000	without drive unit						
		B10	0.12 kW, 14 rpm, 8.4 l/h, 2 bar (Reduction gear system), 3-phase, 230/400 V AC						
		B11	0.12 kW, 35 rpm, 21 l/h, 2 bar (Reduction gear system), 3-phase, 230/400 V AC						
		B12	0.12 kW, 70 rpm, 42 l/h, 2 bar (Reduction gear system), 3-phase, 230/400 V AC						
		B13	0.18 kW, 93 rpm, 55.8 l/h, 2 bar (Reduction gear system), 3-phase, 230/400 V AC						
		B14	0.18 kW, 140 rpm, 84 l/h, 2 bar (Reduction gear system), 3-phase, 230/400 V AC						
		B21	0.12 kW, 10.9 - 57 rpm, 6,5-34.2 l/h, 2 bar (Manual adjustment gear), 3-phase, 230/400 V AC						
		B22	0.25 kW, 34 - 176 rpm, 20.4-105 l/h, 2 bar (Manual adjustment gear), 3-phase, 230/400 V AC						
		B31	0.18 kW, 13 - 130 rpm, 7.8-78 l/h, 7-70 Hz, 2 bar (Gear motor with integrated frequency converter), 1-phase, 230 V AC						
		B41	0.18 kW, 4 - 105 rpm, 2.4-63 l/h, 3-75 Hz, 2 bar (Gear motor, external frequency converter required), 3-phase, 230/400 V AC						
			Hose material						
			A	Norprene A60G					
			B	Norprene A60F (food grade)					
			C	Solva					
			D	Silicone					
				Base plate					
				0	Base plate, painted steel				
				1	Base plate, stainless steel				
					Batch controller				
					0	Without controller			
						Special motor			
						0	Standard (3 phase)		
						D	Single phase motor, 0.12 kW (only for B10-B13)		
						E	Single phase motor, 0.18 kW (only for B14, B15)		
							Pump head		
							0	with one pump head	
								Approvals	
								01	CE



2.8.3 Peristaltic Pump DULCO®flex DFBa

Low and medium pump capacities

Feed rates of up to 649 l/h at 8 bar

The peristaltic pump DULCO®flex DFBa is designed for low and medium pump capacities of up to 649 l/h at 8 bar.

The peristaltic pump DULCO®flex DFBa is equipped with rollers and fabric-reinforced hoses for tough industrial use. Pumps with a Halar-coated pump housing can be produced for use in the chemical industry.

Your benefits

- Simple to operate
- Reversible pumping direction
- Hose materials suitable for various chemicals
- Simple and quick hose change
- Ideal for pumping pasty, high-viscosity, abrasive and gaseous media
- Self-priming
- Safeguarded against running dry

Technical details

- Connector sizes 3/8 - 1"
- Feed rates of 0.023 - 0.24 l/rev
- Hose materials NR, NBR, EPDM, NR-A, Norprene, NBR-A, Hypalon, Tygon
- Self-priming up to 8 m
- Back pressure up to 8 bar

Options

- Stainless steel base plate
- Available as a mobile unit
- Various connectors, such as BSP, NPT, Tri-Clamp and DIN 11851
- Pulsation damper
- Leakage sensor
- Housing with Halar coating
- Food approval EU 1935/2004

Field of application

- Chemical industry
- Waste water
- Mining

Technical Data

Hose material	NR, NBR, EPDM, NR-A, Norprene, NBR-A, Hypalon, Tygon
Self-priming	up to 8 m
Rollers / shoes	Rollers

Type	Feed rate / revolution	Delivery rate at max. back pressure		Hose diameter (internal)	Max. solids	Weight without drive	Connection DN
	l/U	bar	l/h	mm	mm	kg	
DFBa 010	0.02	8	60	10	2.5	6	3/8"
DFBa 013	0.04	8	100	13	3.3	6	3/8"
DFBa 016	0.09	8	188	16	4.0	13	3/4"
DFBa 019	0.12	2	671	19	4.8	13	1"
DFBa 022	0.24	8	649	22	5.5	22	1"

2.8 Peristaltic Pump DULCO®flex

DULCO®flex DFBa 010 peristaltic pump

DFBa	Type											
	010	DFBa 010, 0.023 l/revolution										
		Power end/drive*										
		000	without drive unit									
		A10	0.12 kW, 15 rpm, 21 l/h, 8 bar (Reduction gear system), 3-phase, 230/400 V AC									
		A11	0.12 kW, 20 rpm, 28 l/h, 8 bar (Reduction gear system), 3-phase, 230/400 V AC									
		A12	0.18 kW, 29 rpm, 40 l/h, 6 bar (Reduction gear system), 3-phase, 230/400 V AC									
		A13	0.18 kW, 46 rpm, 64 l/h, 4 bar (Reduction gear system), 3-phase, 230/400 V AC									
		A14	0.25 kW, 57 rpm, 79 l/h, 4 bar (Reduction gear system), 3-phase, 230/400 V AC									
		A15	0.25 kW, 70 rpm, 97 l/h, 2 bar (Reduction gear system), 3-phase, 230/400 V AC									
		A21	0.12 kW, 3 - 16 rpm, 4-22 l/h, 8 bar (Manual adjustment gear), 3-phase, 230/400 V AC									
		A22	0.25 kW, 5 – 29 rpm, 7 – 40 l/h, 6 bar									
		A23	0.25 kW, 10 - 53 rpm, 14-73 l/h, 4 bar (Manual adjustment gear), 3-phase, 230/400 V AC									
		A24	0.25 kW, 15 - 80 rpm, 21-110 l/h, 2 bar (Manual adjustment gear), 3-phase, 230/400 V AC									
		A31	0.37 kW, 9 - 34 rpm, 12 – 47 l/h, 20 – 75 Hz, 6 bar (Gear motor with integrated frequency converter), 1-phase, 230 V AC									
		A32	0.37 kW, 16 - 60 rpm, 22-83 l/h, 20-75 Hz, 4 bar (Gear motor with integrated frequency converter), 1-phase, 230 V AC									
		A41	0.18 kW, 1 - 34 rpm, 1 – 47 l/h, 3 – 75 Hz, 6 bar (Gear motor, external frequency converter required), 3-phase, 230/400 V AC									
		A42	0.18 kW, 2 - 44 rpm, 3 – 60 l/h, 3 – 75 Hz, 4 bar (Gear motor, external frequency converter required), 3-phase, 230/400 V AC									
		A43	0.25 kW, 3-69 rpm, 4-95 l/h, 3-75 Hz, 4 bar (Gear motor, external frequency converter required), 3-phase, 230/400 V AC									
			Hose material									
			0	NR								
			B	NBR								
			E	EPDM								
			R	NR-A								
			N	Norprene (max. 2 bar)								
			A	NBR-A								
			H	Hypalon								
				Hydraulic connections								
				A	VA BSP 3/8"							
				B	VA NPT 3/8"							
				C	PP BSP 3/8"							
				D	PVDF BSP 3/8"							
				E	PVDF NPT 3/8"							
				F	PVC NPT 3/8"							
				G	Tri-Clamp, VA, 1/2"							
				H	DIN 11851, VA, NW10							
					Base plate							
					0	Base plate, painted steel						
					1	Base plate, stainless steel						
					2	Portable unit + painted steel base plate						
					3	Portable unit + stainless steel base plate						
						Leakage sensor						
						0	Without leakage sensor					
						L	With leakage sensor					
						M	as "L" + relay output					
							Rotor					
							0	Rotor with 2 rollers				
								Batch controller				
								0	Without controller			
									Special version			
									0	Standard		
									H	Halar-coated housing		
										Vacuum system		
										0	without	
											Approvals	
											01	CE
											02	CE+Food approval EU 1935/2004

* The pumps are factory-set to a maximum back pressure of 4 bar, unless the stated pressure is lower. Please state any deviating pressures when ordering.



2.8 Peristaltic Pump DULCO®flex

DULCO®flex DFBa 013 peristaltic pump

DFBa	Type											
	013	DFBa 013, 0.039 l/revolution										
		Power end/drive*										
		000	without drive unit									
		B10	0.12 kW, 15 rpm, 35 l/h, 8 bar (Reduction gear system), 3-phase, 230/400 V AC									
		B11	0.12 kW, 20 rpm, 46 l/h, 8 bar (Reduction gear system), 3-phase, 230/400 V AC									
		B12	0.18 kW, 29 rpm, 67 l/h, 6 bar (Reduction gear system), 3-phase, 230/400 V AC									
		B13	0.18 kW, 46 rpm, 107 l/h, 4 bar (Reduction gear system), 3-phase, 230/400 V AC									
		B14	0.25 kW, 57 rpm, 133 l/h, 4 bar (Reduction gear system), 3-phase, 230/400 V AC									
		B15	0.25 kW, 70 rpm, 163 l/h, 2 bar (Reduction gear system), 3-phase, 230/400 V AC									
		B21	0.12 kW, 3 - 16 rpm, 7-37 l/h, 8 bar (Manual adjustment gear), 3-phase, 230/400 V AC									
		B22	0.25 kW, 5 – 29 rpm, 11 – 67 l/h, 6 bar (Manual adjustment gear), 3-phase, 230/400 V AC									
		B23	0.25 kW, 10 - 53 rpm, 23-124 l/h, 4 bar (Manual adjustment gear), 3-phase, 230/400 V AC									
		B24	0.25 kW, 15 - 80 rpm, 35-187 l/h, 2 bar (Manual adjustment gear), 3-phase, 230/400 V AC									
		B31	0.37 kW, 9 - 34 rpm, 21 – 79 l/h, 20 – 75 Hz, 6 bar (Gear motor with integrated frequency converter), 1-phase, 230 V AC									
		B32	0.37 kW, 16 - 60 rpm, 37-140 l/h, 20-75 Hz, 4 bar (Gear motor with integrated frequency converter), 1-phase, 230 V AC									
		B41	0.18 kW, 1 - 34 rpm, 2 – 78 l/h, 3 – 75 Hz, 6 bar (Gear motor, external frequency converter required), 3-phase, 230/400 V AC									
		B42	0.18 kW, 2 - 44 rpm, 5 – 100 l/h, 3 – 75 Hz, 4 bar (Gear motor, external frequency converter required), 3-phase, 230/400 V AC									
		B43	0.25 kW, 3-69 rpm, 7-157 l/h, 3-75 Hz, 4 bar (Gear motor, external frequency converter required), 3-phase, 230/400 V AC									
			Hose material									
			0	NR								
			B	NBR								
			E	EPDM								
			R	NR-A								
			N	Norprene (max. 2 bar)								
			A	NBR-A								
			H	Hypalon								
				Hydraulic connections								
				A	VA BSP 3/8"							
				B	VA NPT 3/8"							
				C	PP BSP 3/8"							
				D	PVDF BSP 3/8"							
				E	PVDF NPT 3/8"							
				F	PVC NPT 3/8"							
				G	Tri-Clamp, VA, 3/4"							
				H	DIN 11851, VA, NW15							
					Base plate							
					0	Base plate, painted steel						
					1	Base plate, stainless steel						
					2	Portable unit + painted steel base plate						
					3	Portable unit + stainless steel base plate						
						Leakage sensor						
						0	Without leakage sensor					
						L	With leakage sensor					
						M	as "L" + relay output					
							Rotor					
							0	Rotor with 2 rollers				
								Batch controller				
								0	Without controller			
									Special version			
									0	Standard		
									H	Halar-coated housing		
										Vacuum system		
										0	without	
											Approvals	
											01	CE
											02	CE+Food approval EU 1935/2004

* The pumps are factory-set to a maximum back pressure of 4 bar, unless the stated pressure is lower. Please state any deviating pressures when ordering.



2.8 Peristaltic Pump DULCO®flex

DULCO®flex DFBa 016 peristaltic pump

DFBa	Type											
	016	DFBa 016, 0.092 l/revolution										
		Power end/drive*										
		000	without drive unit									
		C10	0.18 kW, 14 rpm, 77 l/h, 8 bar (Reduction gear system), 3-phase, 230/400 V AC									
		C11	0.18 kW, 20 rpm, 110 l/h, 8 bar (Reduction gear system), 3-phase, 230/400 V AC									
		C12	0.25 kW, 32 rpm, 176 l/h, 4 bar (Reduction gear system), 3-phase, 230/400 V AC									
		C13	0.25 kW, 46 rpm, 253 l/h, 4 bar (Reduction gear system), 3-phase, 230/400 V AC									
		C14	0.37 kW, 57 rpm, 314 l/h, 4 bar (Reduction gear system), 3-phase, 230/400 V AC									
		C15	0.37 kW, 70 rpm, 386 l/h, 2 bar (Reduction gear system), 3-phase, 230/400 V AC									
		C21	0.37 kW, 8 - 50 rpm, 44-276 l/h, 4 bar (Manual adjustment gear), 3-phase, 230/400 V AC									
		C22	0.37 kW, 10 - 61 rpm, 55-336 l/h, 2 bar (Manual adjustment gear), 3-phase, 230/400 V AC									
		C23	0.37 kW, 16 - 91 rpm, 88-502 l/h, 1 bar (Manual adjustment gear), 3-phase, 230/400 V AC									
		C31	0.37 kW, 9 - 34 rpm, 49 – 187 l/h, 20 – 75 Hz, 4 bar (Gear motor with integrated frequency converter), 1-phase, 230 V AC									
		C32	0.37 kW, 16 - 60 rpm, 88-331 l/h, 20-75 Hz, 2 bar (Gear motor with integrated frequency converter), 1-phase, 230 V AC									
		C41	0.25 kW, 1 – 34 rpm, 5 – 188 l/h, 3 – 75 Hz, 4 bar (Gear motor, external frequency converter required), 3-phase, 230/400 V AC									
		C42	0.25 kW, 2-48 rpm, 11-265 l/h, 3-75 Hz, 4 bar (Gear motor, external frequency converter required), 3-phase, 230/400 V AC									
		C43	0.37 kW, 3-69 rpm, 16-381 l/h, 3-75 Hz, 2 bar (Gear motor, external frequency converter required), 3-phase, 230/400 V AC									
			Hose material									
			0	NR								
			B	NBR								
			E	EPDM								
			R	NR-A								
			N	Norprene (max. 2 bar)								
			A	NBR-A								
			H	Hypalon								
				Hydraulic connections								
				A	VA BSP 3/4"							
				B	VA NPT 3/4"							
				C	PP BSP 3/4"							
				D	PVDF BSP 3/4"							
				E	PVDF NPT 3/4"							
				F	PVC NPT 3/4"							
				G	Tri-Clamp, VA, 1"							
				H	DIN 11851, VA, NW20							
					Base plate							
					0	Base plate, painted steel						
					1	Base plate, stainless steel						
					2	Portable unit + painted steel base plate						
					3	Portable unit + stainless steel base plate						
						Leakage sensor						
						0	Without leakage sensor					
						L	With leakage sensor					
						M	as "L" + relay output					
							Rotor					
							0	Rotor with 2 rollers				
								Batch controller				
								0	Without controller			
									Special version			
									0	Standard		
									H	Halar-coated housing		
										Vacuum system		
										0	without	
											Approvals	
											01	CE
											02	CE+Food approval EU 1935/2004

* The pumps are factory-set to a maximum back pressure of 4 bar, unless the stated pressure is lower. Please state any deviating pressures when ordering.



2.8 Peristaltic Pump DULCO®flex

DULCO®flex DFBa 019 peristaltic pump

DFBa	Type											
	019	DFBa 019, 0.123 l/revolution										
		Power end/drive*										
		000	without drive unit									
		D10	0.18 kW, 15 rpm, 110 l/h, 2 bar (Reduction gear system), 3-phase, 230/400 V AC									
		D11	0.18 kW, 20 rpm, 148 l/h, 2 bar (Reduction gear system), 3-phase, 230/400 V AC									
		D12	0.25 kW, 32 rpm, 236 l/h, 2 bar (Reduction gear system), 3-phase, 230/400 V AC									
		D13	0.25 kW, 46 rpm, 339 l/h, 2 bar (Reduction gear system), 3-phase, 230/400 V AC									
		D14	0.37 kW, 57 rpm, 421 l/h, 2 bar (Reduction gear system), 3-phase, 230/400 V AC									
		D15	0.37 kW, 70 rpm, 517 l/h, 2 bar (Reduction gear system), 3-phase, 230/400 V AC									
		D21	0.37 kW, 8 - 50 rpm, 59-369 l/h, 2 bar (Manual adjustment gear), 3-phase, 230/400 V AC									
		D22	0.37 kW, 10 - 61 rpm, 74-450 l/h, 2 bar (Manual adjustment gear), 3-phase, 230/400 V AC									
		D23	0.37 kW, 16 - 91 rpm, 118-671 l/h, 2 bar (Manual adjustment gear), 3-phase, 230/400 V AC									
		D31	0.37 kW, 9 - 34 rpm, 66-251 l/h, 20-75 Hz, 2 bar (Gear motor with integrated frequency converter), 1-phase, 230 V AC									
		D32	0.37 kW, 16 - 60 rpm, 118-443 l/h, 20-75 Hz, 2 bar (Gear motor with integrated frequency converter), 1-phase, 230 V AC									
		D41	0.25 kW, 1-34 rpm, 7-251 l/h, 3-75 Hz, 2 bar (Gear motor, external frequency converter required), 3-phase, 230/400 V AC									
		D42	0.25 kW, 2-48 rpm, 15-354 l/h, 3-75 Hz, 2 bar (Gear motor, external frequency converter required), 3-phase, 230/400 V AC									
		D43	0.37 kW, 3-69 rpm, 22-509 l/h, 3-75 Hz, 2 bar (Gear motor, external frequency converter required), 3-phase, 230/400 V AC									
			Hose material									
			N	Norprene (max. 2 bar)								
			T	TYGON (max. 2 bar)								
				Hydraulic connections								
				A	VA BSP 1"							
				B	VA NPT 1"							
				C	PP BSP 1"							
				D	PVDF BSP 1"							
				E	PVDF NPT 1"							
				F	PVC NPT 1"							
				G	Tri-Clamp, VA, 1"							
				H	DIN 11851, VA, NW25							
					Base plate							
					0	Base plate, painted steel						
					1	Base plate, stainless steel						
					2	Portable unit + painted steel base plate						
					3	Portable unit + stainless steel base plate						
						Leakage sensor						
						0	Without leakage sensor					
						L	With leakage sensor					
						M	as "L" + relay output					
							Rotor					
							0	Rotor with 2 rollers				
								Batch controller				
								0	Without controller			
									Special version			
									0	Standard		
									H	Halar-coated housing		
										Vacuum system		
										0	without	
											Approvals	
											01	CE
											02	CE+Food approval EU 1935/2004

* The pumps are factory-set to a maximum back pressure of 4 bar, unless the stated pressure is lower. Please state any deviating pressures when ordering.



2.8 Peristaltic Pump DULCO®flex

DULCO®flex DFBa 022 peristaltic pump

DFBa	Type											
	022	DFBa 022, 0.246 l/revolution										
		Power end/drive*										
		000	without drive unit									
		E10	0.25 kW, 17 rpm, 251 l/h, 8 bar (Reduction gear system), 3-phase, 230/400 V AC									
		E11	0.37 kW, 23 rpm, 339 l/h, 8 bar (Reduction gear system), 3-phase, 230/400 V AC									
		E12	0.55 kW, 38 rpm, 561 l/h, 4 bar (Reduction gear system), 3-phase, 230/400 V AC									
		E13	0.55 kW, 45 rpm, 664 l/h, 4 bar (Reduction gear system), 3-phase, 230/400 V AC									
		E14	0.55 kW, 54 rpm, 797 l/h, 2 bar (Reduction gear system), 3-phase, 230/400 V AC									
		E15	0.75 kW, 66 rpm, 974 l/h, 2 bar (Reduction gear system), 3-phase, 230/400 V AC									
		E21	0.37 kW, 4-20 rpm, 59-295 l/h, 8 bar (Manual adjustment gear), 3-phase, 230/400 V AC									
		E22	0.55 kW, 6 - 32 rpm, 89-472 l/h, 4 bar (Manual adjustment gear), 3-phase, 230/400 V AC									
		E23	0.75 kW, 9 - 48 rpm, 133-708 l/h, 2 bar (Manual adjustment gear), 3-phase, 230/400 V AC									
		E31	0.55 kW, 12 - 44 rpm, 177-649 l/h, 20-75 Hz, 4 bar (Gear motor with integrated frequency converter), 1-phase, 230 V AC									
		E32	0.75 kW, 18 - 67 rpm, 266-989 l/h, 20-75 Hz, 2 bar (Gear motor with integrated frequency converter), 1-phase, 230 V AC									
		E41	0.55 kW, 2 - 44 rpm, 30 – 649 l/h, 3 – 75 Hz, 4 bar (Gear motor, external frequency converter required), 3-phase, 230/400 V AC									
		E42	0.75 kW, 2-57 rpm, 30-841 l/h, 3-75 Hz, 4 bar (Gear motor, external frequency converter required), 3-phase, 230/400 V AC									
		E43	1.1 kW, 3 - 81 rpm, 44-1196 l/h, 3-75 Hz, 2 bar (Gear motor, external frequency converter required), 3-phase, 230/400 V AC									
			Hose material									
			0	NR (natural rubber)								
			B	NBR								
			E	EPDM								
			R	NR-A								
			N	Norprene (max. 2 bar back pressure)								
			A	NBR-A								
			H	Hypalon								
				Hydraulic connections								
				A	VA BSP 1"							
				B	VA NPT 1"							
				C	PP BSP 1"							
				D	PVDF BSP 1"							
				E	PVDF NPT 1"							
				F	PVC NPT 1"							
				G	Tri-Clamp, VA, 1"							
				H	DIN 11851, VA, NW25							
					Base plate							
					0	Base plate, painted steel						
					1	Base plate, stainless steel						
					2	Portable unit + painted steel base plate						
					3	Portable unit + stainless steel base plate						
						Leakage sensor						
						0	Without leakage sensor					
						L	With leakage sensor					
						M	as "L" + relay output					
							Rotor					
							0	Rotor with 2 rollers				
								Batch controller				
								0	Without controller			
									Special version			
									0	Standard		
									H	Halar-coated housing		
										Vacuum system		
										0	without	
											Approvals	
											01	CE
											02	CE+Food approval EU 1935/2004

* The pumps are factory-set to a maximum back pressure of 4 bar, unless the stated pressure is lower. Please state any deviating pressures when ordering.



2.8 Peristaltic Pump DULCO®flex

2.8.4 Peristaltic Pump DULCO®flex DFCa

High pump capacities and long service life

Feed rates of up to 8,900 l/h at 8 bar

High pump capacities are not a problem with the peristaltic pump DULCO®flex DFCa. It is equipped with extra rollers and fabric-reinforced hoses for industrial use.

It is ideal for heavy-duty industrial applications and pump capacities of up to 8,900 l/h at 8 bar back pressure.

A ball-bearing mounted rotor ensures extremely smooth running and a long service life.

Pumps with a Halar-coated pump housing can be produced for use in the chemical industry.

A vacuum unit can optionally be used to help the hose to return to its original shape with pumps of the product range DFCa, thereby improving their suction behaviour and ensuring the even feed of high-viscosity media.

Your benefits

- Simple to operate
- Reversible pumping direction
- Hose materials suitable for various chemicals
- Simple and quick hose change
- Ideal for pumping pasty, high-viscosity, abrasive and gaseous media
- Self-priming
- Safeguarded against running dry

Technical details

- Connector sizes 1 1/4″- DN 80
- Feed rates of 0.43 - 6.72 l/rev
- Hose materials NR, NBR, EPDM, Norprene, NR-A, NBR-A
- Self-priming up to 8 m
- Back pressure up to 8 bar

Options

- Stainless steel base plate
- Available as a mobile unit
- Various connectors, such as BSP, NPT, Tri-Clamp, DIN 11851 and flange
- Pulsation damper
- Leakage sensor
- Housing with Halar coating
- Vacuum system
- Food approval EU 1935/2004

Field of application

- Chemical industry
- Waste water
- Mining

Technical Data

Hose material	NR, NBR, EPDM, NR-A, Norprene, NBR-A
Self-priming	up to 8 m
Rollers / shoes	Rollers

Type	Feed rate / revolution	Delivery rate at max. back pressure		Hose diameter (internal)	Max. solids	Weight without drive	Connection DN
	l/U	bar	l/h		mm	kg	
DFCa 030	0.43	8	727	28	7.0	62	DN 32
DFCa 040	0.86	8	1,495	35	8.8	89	DN 40
DFCa 050	1.47	8	1,852	40	10.0	140	DN 40
DFCa 060	3.16	8	5,100	55	13.8	235	DN 50
DFCa 070	6.72	8	8,900	65	16.3	440	DN 65



2.8 Peristaltic Pump DULCO®flex

DULCO®flex DFCa 030 peristaltic pump

DFCa	Type										
	030	DFCa 030, 0.433 l/revolution									
		Power end/drive*									
		000	without drive unit								
		A11	0.25 kW, 18 rpm, 468 l/h, 4 bar (Reduction gear system), 3-phase, 230/400 V AC								
		A12	0.37 kW, 29 rpm, 753 l/h, 4 bar (Reduction gear system), 3-phase, 230/400 V AC								
		A13	0.55 kW, 38 rpm, 987 l/h, 4 bar (Reduction gear system), 3-phase, 230/400 V AC								
		A14	0.55 kW, 55 rpm, 1429 l/h, 2 bar (Reduction gear system), 3-phase, 230/400 V AC								
		A31	0.55 kW, 11 - 39 rpm, 286-1013 l/h, 20-75 Hz, 4 bar (Gear motor with integrated frequency converter), 3-phase, 400 V AC								
		A32	0.75 kW, 18 - 63 rpm, 468 - 1637 l/h, 20-75 Hz, 2 bar (Gear motor with integrated frequency converter), 3-phase, 400 V AC								
		A41	0.37 kW, 2 - 28 rpm, 52 – 727 l/h, 3 – 50 Hz, 4 bar (Gear motor, external frequency converter required), 3-phase, 230/400 V AC								
		A42	0.75 kW, 3 - 59 rpm, 78-1533 l/h, 3-65 Hz, 2 bar (Gear motor, external frequency converter required), 3-phase, 230/400 V AC								
			Hose material								
			0	NR							
			B	NBR							
			E	EPDM							
			R	NR-A							
			A	NBR-A							
			N	Norprene (max. 2 bar)							
				Hydraulic connections							
				A	VA BSP 1 1/4"						
				B	VA NPT 1 1/4"						
				C	PP BSP 1 1/4"						
				D	PVDF/PTFE BSP 1 1/4"						
				F	PVC NPT 1 1/4"						
				G	Tri-Clamp, VA, 1 1/2"						
				H	DIN 11851, VA, NW32						
				I	DIN flange VA DN32						
				L	ANSI flange VA, 1 1/4"						
				P	ANSI flange PVC, 1 1/4"						
					Base plate						
					0	Base plate, painted steel					
					1	Base plate, stainless steel					
					2	Portable unit + painted steel base plate					
					3	Portable unit + stainless steel base plate					
						Leakage sensor					
						0	without leakage sensor				
						L	with leakage sensor				
						M	as "L" + relay output				
							Rotor				
							0	Rotor with 2 rollers			
								Batch controller			
								0	without controller		
									Special version		
									0	Standard	
									H	Halar-coated housing	
										Vacuum system	
										0	without
										V	with vacuum system
											Approvals
											01 CE
											02 CE+Food approval EU 1935/2004

* The pumps are factory-set to a maximum back pressure of 4 bar, unless the stated pressure is lower. Please state any deviating pressures when ordering.



2.8 Peristaltic Pump DULCO®flex

DULCO®flex DFCa 040 peristaltic pump

DFCa	Type											
	040	DFCa 040, 0.86 l/revolution										
		Power end/drive*										
		000	without drive unit									
		B11	0.55 kW, 18 rpm, 928 l/h, 4 bar (Reduction gear system), 3-phase, 230/400 V AC									
		B12	0.55 kW, 29 rpm, 1495 l/h, 4 bar (Reduction gear system), 3-phase, 230/400 V AC									
		B13	0.75 kW, 38 rpm, 1960 l/h, 4 bar (Reduction gear system), 3-phase, 230/400 V AC									
		B14	1.1 kW, 54 rpm, 2786 l/h, 2 bar (Reduction gear system), 3-phase, 230/400 V AC									
		B31	1.1 kW, 12 - 36 rpm, 619-1857 l/h, 20-70 Hz, 4 bar (Gear motor with integrated frequency converter), 3-phase, 400 V AC									
		B32	1.5 kW, 15 - 53 rpm, 774-2735 l/h, 20-70 Hz, 2 bar (Gear motor with integrated frequency converter), 3-phase, 400 V AC									
		B41	1.1 kW, 2 - 49 rpm, 103-2528 l/h, 3-65 Hz, 2 bar (Gear motor, external frequency converter required), 3-phase, 230/400 V AC									
		B42	1.5 kW, 3 - 53 rpm, 154-2735 l/h, 3-65 Hz, 2 bar (Gear motor, external frequency converter required), 3-phase, 230/400 V AC									
			Hose material									
			0	NR								
			B	NBR								
			E	EPDM								
			R	NR-A								
			A	NBR-A								
			N	Norprene (max. 2 bar)								
				Hydraulic connections								
				A	VA BSP 1 1/2"							
				B	VA NPT 1 1/2"							
				C	PP BSP 1 1/2"							
				D	PVDF/PTFE BSP 1 1/2"							
				G	Tri-Clamp, VA, 1 1/2"							
				H	DIN 11851, VA, NW40							
				I	DIN flange VA DN40							
				L	ANSI flange VA, 1 1/2"							
				P	ANSI flange PVC, 1 1/2"							
					Base plate							
					0	Base plate, painted steel						
					1	Base plate, stainless steel						
					2	Portable unit + painted steel base plate						
					3	Portable unit + stainless steel base plate						
						Leakage sensor						
						0	without leakage sensor					
						L	with leakage sensor					
						M	as "L" + relay output					
							Rotor					
							0	Rotor with 2 rollers				
								Batch controller				
								0	without controller			
									Special version			
									0	Standard		
									H	Halar-coated housing		
										Vacuum system		
										0	without	
										V	with vacuum system	
											Approvals	
											01	CE
											02	CE+Food approval EU 1935/2004

* The pumps are factory-set to a maximum back pressure of 4 bar, unless the stated pressure is lower. Please state any deviating pressures when ordering.



2.8 Peristaltic Pump DULCO®flex

DULCO®flex DFCa 050 peristaltic pump

DFCa	Type										
	050	DFCa 050, 1.47 l/revolution									
		Power end/drive*									
		000	without drive unit								
		C11	0.55 kW, 14 rpm, 1235 l/h, 4 bar (Reduction gear system), 3-phase, 230/400 V AC								
		C12	0.75 kW, 21 rpm, 1852 l/h, 4 bar (Reduction gear system), 3-phase, 230/400 V AC								
		C13	1.1 kW, 30 rpm, 2646 l/h, 4 bar (Reduction gear system), 3-phase, 230/400 V AC								
		C14	1.5 kW, 38 rpm, 3352 l/h, 4 bar (Reduction gear system), 3-phase, 230/400 V AC								
		C15	1.5 kW, 48 rpm, 4234 l/h, 2 bar (Reduction gear system), 3-phase, 230/400 V AC								
		C16	2.2 kW, 58 rpm, 5116 l/h, 2 bar (Reduction gear system), 3-phase, 230/400 V AC								
		C31	1.5 kW, 8 - 29 rpm, 706-2558 l/h, 20-70 Hz, 4 bar (Gear motor with integrated frequency converter), 3-phase, 400 V AC								
		C32	2.2 kW, 17 - 60 rpm, 1499-5292 l/h, 20-70 Hz, 2 bar (Gear motor with integrated frequency converter), 3-phase, 400 V AC								
		C41	1.5 kW, 1 - 27 rpm, 88-2381 l/h, 3-65 Hz, 4 bar (Gear motor, external frequency converter required), 3-phase, 230/400 V AC								
		C42	2.2 kW, 3 - 55 rpm, 265-4851 l/h, 3-65 Hz, 2 bar (Gear motor, external frequency converter required), 3-phase, 230/400 V AC								
			Hose material								
			0	NR							
			B	NBR							
			E	EPDM							
			R	NR-A							
			A	NBR-A							
			N	Norprene (max. 2 bar)							
				Hydraulic connections							
				I	DIN flange VA DN40						
				G	Tri-Clamp, VA, 2"						
				H	DIN 11851, VA, NW50						
				J	DIN flange PP DN40						
				K	DIN flange PVDF/PTFE DN40						
				L	ANSI flange VA, 1 1/2"						
				M	ANSI flange PP 1 1/2"						
				N	ANSI flange PVDF/PTFE 1 1/2"						
					Base plate						
					0	Base plate, painted steel					
					1	Base plate, stainless steel					
					2	Portable unit + painted steel base plate					
					3	Portable unit + stainless steel base plate					
						Leakage sensor					
						0	without leakage sensor				
						L	with leakage sensor				
						M	as "L" + relay output				
							Rotor				
							0	Rotor with 2 rollers			
								Batch controller			
								0	without controller		
									Special version		
									0	Standard	
									H	Halar-coated housing	
										Vacuum system	
										0	without
										V	with vacuum system
											Approvals
											01 CE
											02 CE+Food approval EU 1935/2004

* The pumps are factory-set to a maximum back pressure of 4 bar, unless the stated pressure is lower. Please state any deviating pressures when ordering.



2.8 Peristaltic Pump DULCO®flex

DULCO®flex DFCa 060 peristaltic pump

DFCa	Type											
	060	DFCa 060, 3.16 l/revolution										
		Power end/drive*										
		000	without drive unit									
		D11	2.2 kW, 18 rpm, 3.4 m^3/h, 4 bar (Reduction gear system), 3-phase, 230/400 V AC									
		D12	2.2 kW, 22 rpm, 4.2 m^3/h, 4 bar (Reduction gear system), 3-phase, 230/400 V AC									
		D13	3.0 kW, 27 rpm, 5.1 m^3/h, 4 bar (Reduction gear system), 3-phase, 230/400 V AC									
		D14	3.0 kW, 33 rpm, 6.3 m^3/h, 4 bar (Reduction gear system), 3-phase, 230/400 V AC									
		D15	3.0 kW, 42 rpm, 8.0 m^3/h, 4 bar (Reduction gear system), 3-phase, 230/400 V AC									
		D16	3.0 kW, 47 rpm, 8.9 m^3/h, 2 bar (Reduction gear system), 3-phase, 230/400 V AC									
		D31	3.0 kW, 7 – 25 rpm, 1.3 – 4.7 m^3/h, 4 bar (Gear motor with integrated frequency converter), 3-phase, 400 V AC									
		D32	4.0 kW, 17 - 59 rpm, 3,2-11.2 m^3/h, 2 bar (Gear motor with integrated frequency converter), 3-phase, 400 V AC									
		D41	3.0 kW, 1 – 24 rpm, 0.2 – 4.5 m^3/h, 4 bar (Gear motor, external frequency converter required), 3-phase, 230/400 V AC									
		D42	4.0 kW, 2 - 55 rpm, 0,4-10.4 m^3/h, 2 bar (Gear motor, external frequency converter required), 3-phase, 230/400 V AC									
			Hose material									
			0	NR								
			B	NBR								
			E	EPDM								
			R	NR-A								
			A	NBR-A								
			N	Norprene (max. 2 bar)								
				Hydraulic connections								
				I	DIN flange VA DN50							
				G	Tri-Clamp, VA, 2 1/2"							
				H	DIN 11851, VA, NW50							
				J	DIN flange PP DN50							
				K	DIN flange VA, Halar coated + PVDF inserts DN50							
				L	ANSI flange VA 2"							
				M	ANSI flange PP 2"							
				N	ANSI flange VA, Halar coated + PVDF inserts 2"							
					Base plate							
					0	Base plate, painted steel						
					1	Base plate, stainless steel						
					2	Portable unit + painted steel base plate						
					3	Portable unit + stainless steel base plate						
						Leakage sensor						
						0	without leakage sensor					
						L	with leakage sensor					
						M	as "L" + relay output					
							Rotor					
							0	Rotor with 2 rollers				
								Batch controller				
								0	without controller			
									Special version			
									0	Standard		
									H	Halar-coated housing		
										Vacuum system		
										0	without	
										V	with vacuum system	
											Approvals	
											01	CE
											02	CE+Food approval EU 1935/2004

* The pumps are factory-set to a maximum back pressure of 4 bar, unless the stated pressure is lower. Please state any deviating pressures when ordering.



2.8 Peristaltic Pump DULCO®flex

DULCO®flex DFCa 070 peristaltic pump

DFCa	Type											
	070	DFCa 070, 6.72 l/revolution										
		Power end/drive*										
		000	without drive unit									
		E11	2.2 kW, 13 rpm, 5.2 m^3/h, 4 bar (Reduction gear system), 3-phase, 230/400 V AC									
		E12	3.0 kW, 22 rpm, 8.9 m^3/h, 4 bar (Reduction gear system), 3-phase, 230/400 V AC									
		E13	4.0 kW, 26 rpm, 10.5 m^3/h, 4 bar (Reduction gear system), 3-phase, 230/400 V AC									
		E14	4.0 kW, 32 rpm, 12.9 m^3/h, 4 bar (Reduction gear system), 3-phase, 230/400 V AC									
		E15	5.5 kW, 37 rpm, 14.9 m^3/h, 4 bar (Reduction gear system), 3-phase, 230/400 V AC									
		E16	5.5 kW, 46 rpm, 18.5 m^3/h, 2 bar (Reduction gear system), 3-phase, 230/400 V AC									
		E31	5.5 kW, 8 - 27 rpm, 3.2 - 10.9 m^3/h, 20-60 Hz, 4 bar (Gear motor with integrated frequency converter), 3-phase, 400 V AC									
		E32	7.5 kW, 13 - 38 rpm, 5.2 - 15.3 m^3/h, 20-60 Hz, 2 bar (Gear motor with integrated frequency converter), 3-phase, 400 V AC									
		E41	5.5 kW, 1 - 25 rpm, 0.4 - 10.1 m^3/h, 3-65 Hz, 4 bar (Gear motor, external frequency converter required), 3-phase, 230/400 V AC									
		E42	7.5 kW, 2 - 42 rpm, 0.8 - 16.9 m^3/h, 3-65 Hz, 2 bar (Gear motor, external frequency converter required), 3-phase, 230/400 V AC									
			Hose material									
			0	NR								
			B	NBR								
			E	EPDM								
			R	NR-A								
			A	NBR-A								
				Hydraulic connections								
				I	DIN flange VA DN65							
				G	Tri-Clamp, VA, 3"							
				H	DIN 11851, VA, NW65							
				J	DIN flange PP DN65							
				L	ANSI flange VA, 2 1/2"							
				M	ANSI flange PP 2 1/2"							
				Q	DIN flange VA Halar coated DN65							
				R	ANSI flange VA Halar coated 2 1/2"							
					Base plate							
					0	Base plate, painted steel						
					1	Base plate, stainless steel						
					2	Portable unit + painted steel base plate						
					3	Portable unit + stainless steel base plate						
						Leakage sensor						
						0	without leakage sensor					
						L	with leakage sensor					
						M	as "L" + relay output					
							Rotor					
							0	Rotor with 2 rollers				
								Batch controller				
								0	without controller			
									Special version			
									0	Standard		
									H	Halar-coated housing		
										Vacuum system		
										0	without	
										V	with vacuum system	
											Approvals	
											01	CE
											02	CE+Food approval EU 1935/2004

* The pumps are factory-set to a maximum back pressure of 4 bar, unless the stated pressure is lower. Please state any deviating pressures when ordering.



2.8 Peristaltic Pump DULCO®flex

2.8.5 Peristaltic Pump DULCO®flex DFDa

Maximum pump capacities and high pressures

Feed rates of up to 15,000 l/h at 15 bar

The peristaltic pump DFDa is designed for maximum pump capacities and high pressures and is winning customers over with its noiselessness and long service life. It is fitted with shoes and fabric-reinforced hoses – perfect for industrial use.

The pump housing is filled with glycerine to reduce friction. A ball-bearing mounted rotor ensures extremely smooth running and a long service life. In tough industrial use, the DFDa conveys volumes of up to 15,000 l/h with back pressures of up to 15 bar.

A vacuum unit can optionally be used to help the hose to return to its original shape with pumps of the product range DFDa, thereby improving their suction behaviour and ensuring the even feed of high-viscosity media.

Your benefits

- Simple to operate
- Reversible pumping direction
- Hose materials suitable for various chemicals
- Simple and quick hose change
- Ideal for pumping pasty, high-viscosity, abrasive and gaseous media
- Self-priming
- Safeguarded against running dry

Technical details

- Connector sizes DN 25 – DN 100
- Feed rates of 0.3 - 20.0 l/rev
- Hose materials NR, NBR, EPDM
- Self-priming up to 8 m
- Back pressure up to 15 bar

Options

- Stainless steel base plate
- Available as a mobile unit
- Various connectors, such as Tri-Clamp, DIN 11851 and flange
- Pulsation damper
- Leakage sensor
- Vacuum system

Field of application

- Chemical industry
- Waste water
- Mining

Technical Data

Hose material	NR, NBR, EPDM
Self-priming	up to 8 m
Rollers / shoes	Shoes

Type	Feed rate / revolution	Delivery rate at max. back pressure		Hose diameter (internal)	Max. solids	Weight without drive	Connection DN
	l/U	bar	l/h	mm	mm	kg	
DFDa 025	0.30	15	504	25	6.3	57	DN 25
DFDa 032	0.62	15	3,800	32	8.0	89	DN 32
DFDa 040	1.33	15	2,075	40	10.0	150	DN 40
DFDa 060	2.90	15	3,800	57	14.3	252	DN 50
DFDa 070	6.70	15	7,200	65	16.3	530	DN 65
DFDa 080	11.70	15	8,700	80	20.0	900	DN 80
DFDa 100	20.00	15	14,400	100	25.0	1,100	DN 100



2.8 Peristaltic Pump DULCO®flex

DULCO®flex DFDa 025 peristaltic pump

DFDa	Type										
	025	DFDa 025, 0.3 l/revolution									
		Power end/drive*									
		000	without drive unit								
		A11	0.55 kW, 18 rpm, 324 l/h, 15 bar (Reduction gear system), 3-phase, 230/400 V AC								
		A12	0.75 kW, 28 rpm, 504 l/h, 15 bar (Reduction gear system), 3-phase, 230/400 V AC								
		A13	0.75 kW, 39 rpm, 702 l/h, 10 bar (Reduction gear system), 3-phase, 230/400 V AC								
		A14	0.75 kW, 45 rpm, 810 l/h, 5 bar (Reduction gear system), 3-phase, 230/400 V AC								
		A15	1.1 kW, 55 rpm, 990 l/h, 5 bar (Reduction gear system), 3-phase, 230/400 V AC								
		A31	1.1 kW, 16 - 55 rpm, 288-990 l/h, 20-70 Hz, 5 bar (Gear motor with integrated frequency converter), 3-phase, 400 V AC								
		A32	1.5 kW, 18 - 63 rpm, 324-1134 l/h, 20-70 Hz, 5 bar (Gear motor with integrated frequency converter), 3-phase, 400 V AC								
		A41	0.75 kW, 4 - 36 rpm, 72-648 l/h, 7-65 Hz, 15 bar (Gear motor, external frequency converter required), 3-phase, 230/400 V AC								
		A42	1.1 kW, 6 - 58 rpm, 108-1044 l/h, 7-65 Hz, 5 bar (Gear motor, external frequency converter required), 3-phase, 230/400 V AC								
		A43	1.5 kW, 9 - 86 rpm, 162-1548 l/h, 7-65 Hz, 5 bar (Gear motor, external frequency converter required), 3-phase, 230/400 V AC								
			Hose material								
			0	NR							
			B	NBR							
			E	EPDM							
				Hydraulic connections							
				I	DIN flange VA DN25						
				J	DIN flange PP DN25						
				K	DIN flange PVDF DN25						
				L	ANSI flange VA DN25						
					Base plate						
					0	Base plate, painted steel					
					1	Base plate, stainless steel					
					2	Portable unit + painted steel base plate					
					3	Portable unit + stainless steel base plate					
						Leakage sensor					
						0	without leakage sensor				
						L	with leakage sensor				
						M	as "L" + relay output				
							Rotor				
							0	Rotor with 2 shoes			
								Batch controller			
								0	without controller		
									Special version		
									0	Standard	
									H	Halar-coated housing	
										Vacuum system	
										0	without
										V	with vacuum system
											Approvals
											01 CE

* The pumps are factory-set to a maximum back pressure of 5 bar. Please specify deviating pressures when ordering.



2.8 Peristaltic Pump DULCO®flex

DULCO®flex DFDa 032 peristaltic pump

DFDa	Type										
	032	DFDa 032, 0.625 l/revolution									
		Power end/drive*									
		000	without drive unit								
		B11	0.75 kW, 21 rpm, 787 l/h, 10 bar (Reduction gear system), 3-phase, 230/400 V AC								
		B12	1.1 kW, 21 rpm, 787 l/h, 15 bar (Reduction gear system), 3-phase, 230/400 V AC								
		B13	1.1 kW, 30 rpm, 1125 l/h, 10 bar (Reduction gear system), 3-phase, 230/400 V AC								
		B14	1.1 kW, 38 rpm, 1425 l/h, 10 bar (Reduction gear system), 3-phase, 230/400 V AC								
		B15	1.5 kW, 47 rpm, 1762 l/h, 5 bar (Reduction gear system), 3-phase, 230/400 V AC								
		B16	1.5 kW, 58 rpm, 2175 l/h, 5 bar (Reduction gear system), 3-phase, 230/400 V AC								
		B31	1.5 kW, 12 - 42 rpm, 450 – 1575 l/h, 20 – 70 Hz, 7.5 bar (Gear motor with integrated frequency converter), 3-phase, 400 V AC								
		B32	2.2 kW, 19 - 66 rpm, 712-2475 l/h, 20-70 Hz, 5 bar (Gear motor with integrated frequency converter), 3-phase, 400 V AC								
		B41	1.1 kW, 4 - 39 rpm, 150 – 1462 l/h, 7 – 65 Hz, 7.5 bar (Gear motor, external frequency converter required), 3-phase, 230/400 V AC								
		B42	1.5 kW, 5 - 49 rpm, 190 – 1837 l/h, 7 – 65 Hz, 7.5 bar (Gear motor, external frequency converter required), 3-phase, 230/400 V AC								
		B43	2.2 kW, 8 - 75 rpm, 300-2812 l/h, 7-65 Hz, 5 bar (Gear motor, external frequency converter required), 3-phase, 230/400 V AC								
			Hose material								
			0	NR							
			B	NBR							
			E	EPDM							
				Hydraulic connections							
				I	DIN flange VA DN32						
				J	DIN flange PP DN32						
				K	DIN flange PVDF/PTFE DN 32						
				L	ANSI flange VA, 1 1/4"						
					Base plate						
					0	Base plate, painted steel					
					1	Base plate, stainless steel					
					2	Portable unit + painted steel base plate					
					3	Portable unit + stainless steel base plate					
						Leakage sensor					
						0	without leakage sensor				
						L	with leakage sensor				
						M	as "L" + relay output				
							Rotor				
							0	Rotor with 2 shoes			
								Batch controller			
								0	without controller		
									Special version		
									0	Standard	
									H	Halar-coated housing	
										Vacuum system	
										0	without
										V	with vacuum system
											Approvals
											01 CE

* The pumps are factory-set to a maximum back pressure of 5 bar. Please specify deviating pressures when ordering.



2.8 Peristaltic Pump DULCO®flex

DULCO®flex DFDa 040 peristaltic pump

DFDa	Type										
	040	DFDa 040, 1.33 l/revolution									
		Power end/drive*									
		000	without drive unit								
		C11	1.1 kW, 21 rpm, 1676 l/h, 10 bar (Reduction gear system), 3-phase, 230/400 V AC								
		C12	1.1 kW, 26 rpm, 2075 l/h, 7.5 bar (Reduction gear system), 3-phase, 230/400 V AC								
		C13	1.5 kW, 21 rpm, 1676 l/h, 10 bar (Reduction gear system), 3-phase, 230/400 V AC								
		C14	1.5 kW, 26 rpm, 2075 l/h, 15 bar (Reduction gear system), 3-phase, 230/400 V AC								
		C15	1.5 kW, 38 rpm, 3032 l/h, 7.5 bar (Reduction gear system), 3-phase, 230/400 V AC								
		C16	1.5 kW, 43 rpm, 3431 l/h, 5 bar (Reduction gear system), 3-phase, 230/400 V AC								
		C17	2.2 kW, 48 rpm, 3830 l/h, 5 bar (Reduction gear system), 3-phase, 230/400 V AC								
		C31	2.2 kW, 17 - 60 rpm, 1356-4788 l/h, 20-70 Hz, 5 bar (Gear motor with integrated frequency converter), 3-phase, 400 V AC								
		C41	1.5 kW, 4 - 34 rpm, 320-2713 l/h, 7-65 Hz, 5 bar (Gear motor, external frequency converter required), 3-phase, 230/400 V AC								
		C42	2.2 kW, 4 - 34 rpm, 320-2713 l/h, 7-65 Hz, 10 bar (Gear motor, external frequency converter required), 3-phase, 230/400 V AC								
		C43	2.2 kW, 5 – 49 rpm, 400 – 3910 l/h, 7 – 65 Hz, 5 bar (Gear motor, external frequency converter required), 3-phase, 230/400 V AC								
		C44	3.0 kW, 7 - 62 rpm, 558 – 4948 l/h, 7 – 64 Hz, 5 bar (Gear motor, external frequency converter required), 3-phase, 230/400 V AC								
			Hose material								
			0	NR							
			B	NBR							
			E	EPDM							
				Hydraulic connections							
				I	DIN flange VA DN40						
				J	DIN flange PP DN40						
				K	DIN flange PVDF DN40						
				L	ANSI flange VA, 1 1/2"						
				M	ANSI flange PP 1 1/2"						
				N	ANSI flange PVDF/PTFE 1 1/2"						
					Base plate						
					0	Base plate, painted steel					
					1	Base plate, stainless steel					
					2	Portable unit + painted steel base plate					
					3	Portable unit + stainless steel base plate					
						Leakage sensor					
						0	without leakage sensor				
						L	with leakage sensor				
						M	as "L" + relay output				
							Rotor				
							0	Rotor with 2 shoes			
								Batch controller			
								0	without controller		
									Special version		
									0	Standard	
									H	Halar-coated housing	
										Vacuum system	
										0	without
										V	with vacuum system
											Approvals
											01 CE

* The pumps are factory-set to a maximum back pressure of 5 bar. Please specify deviating pressures when ordering.



2.8 Peristaltic Pump DULCO®flex

DULCO®flex DFDa 060 peristaltic pump

DFDa	Type										
	060	DFDa 060, 2.9 l/revolution									
		Power end/drive*									
		000	without drive unit								
		D11	2.2 kW, 22 rpm, 3.8 m^3/h, 5 bar (Reduction gear system), 3-phase, 230/400 V AC								
		D12	3.0 kW, 26 rpm, 4.5 m^3/h, 5 bar (Reduction gear system), 3-phase, 230/400 V AC								
		D13	4.0 kW, 22 rpm, 3.8 m^3/h, 15 bar (Reduction gear system), 3-phase, 230/400 V AC								
		D14	4.0 kW, 26 rpm, 4.5 m^3/h, 10 bar (Reduction gear system), 3-phase, 230/400 V AC								
		D15	4.0 kW, 32 rpm, 5.6 m^3/h, 5 bar (Reduction gear system), 3-phase, 230/400 V AC								
		D16	4.0 kW, 37 rpm, 6.4 m^3/h, 5 bar (Reduction gear system), 3-phase, 230/400 V AC								
		D17	5.5 kW, 47 rpm, 8.2 m^3/h, 5 bar (Reduction gear system), 3-phase, 230/400 V AC								
		D31	5.5 kW, 10 – 36 rpm, 1.7 – 6.3 m^3/h, 20 – 70 Hz, 5 bar (Gear motor with integrated frequency converter), 3-phase, 400 V AC								
		D32	7.5 kW, 19 – 66 rpm, 3.3 – 11.5 m^3/h, 20 – 70 Hz, 5 bar (Gear motor with integrated frequency converter), 3-phase, 400 V AC								
		D41	5.5 kW, 4 – 34 rpm, 0.7 – 5.9 m^3/h, 20 – 70 Hz, 5 bar (Gear motor, external frequency converter required), 3-phase, 400/660 V AC								
		D42	7.5 kW, 7 – 61 rpm, 1.2 – 10.6 m^3/h, 20 – 70 Hz, 5 bar (Gear motor, external frequency converter required), 3-phase, 400/660 V AC								
			Hose material								
			0	NR							
			B	NBR							
			E	EPDM							
				Hydraulic connections							
				I	DIN flange VA DN 50						
				L	ANSI flange VA DN 50						
				J	ANSI flange PP DN 50						
				M	ANSI flange PP DN 50						
				U	DIN flange VA, Halar-coated + PVDF inserts DN 50						
				V	ANSI flange VA, Halar coated + PVDF inserts DN 50						
					Base plate						
					0	Base plate, painted steel					
					1	Base plate, stainless steel					
					2	Portable unit + painted steel base plate					
						Leakage sensor					
						0	without leakage sensor				
						L	with leakage sensor				
						M	as "L" + relay output				
							Rotor				
							0	Rotor with 2 shoes			
								Batch controller			
								0	without controller		
									Special version		
									0	Standard	
									H	Halar-coated housing	
										Vacuum system	
										0	without
										V	with vacuum system
											Approvals
											01 CE

* The pumps are factory-set to a maximum back pressure of 5 bar. Please specify deviating pressures when ordering.



2.8 Peristaltic Pump DULCO®flex

DULCO®flex DFDa 070 peristaltic pump

DFDa	Type										
	070	DFDa 070, 6.7 l/revolution									
		Power end/drive*									
		000	without drive unit								
		E11	3.0 kW, 13.5 rpm, 5.4 m^3/h, 5 bar (Reduction gear system), 3-phase, 230/400 V AC								
		E12	4.0 kW, 18 rpm, 7.2 m^3/h, 7.5 bar (Reduction gear system), 3-phase, 230/400 V AC								
		E13	5.5 kW, 13.5 rpm, 5.4 m^3/h, 15 bar (Reduction gear system), 3-phase, 230/400 V AC								
		E14	5.5 kW, 26 rpm, 10.4 m^3/h, 5 bar (Reduction gear system), 3-phase, 230/400 V AC								
		E15	7.5 kW, 18 rpm, 7.2 m^3/h, 15 bar (Reduction gear system), 3-phase, 230/400 V AC								
		E16	7.5 kW, 26 rpm, 10.4 m^3/h, 10 bar (Reduction gear system), 3-phase, 230/400 V AC								
		E17	7.5 kW, 32 rpm, 12.8 m^3/h, 7.5 bar (Reduction gear system), 3-phase, 230/400 V AC								
		E18	7.5 kW, 40 rpm, 16 m^3/h, 5 bar (Reduction gear system), 3-phase, 230/400 V AC								
		E31	7.5 kW, 10 - 36 rpm, 4 - 14.4 m^3/h, 20-70 Hz, 5 bar (Gear motor with integrated frequency converter), 3-phase, 400 V AC								
		E41	7.5 kW, 4 - 34 rpm, 1.6 - 13.7 m^3/h, 7-65 Hz, 5 bar (Gear motor, external frequency converter required), 3-phase, 400/660 V AC								
			Hose material								
			0	NR							
			B	NBR							
			E	EPDM							
				Hydraulic connections							
				I	DIN flange VA DN65						
				J	DIN flange PP DN65						
				L	ANSI flange VA, 2 1/2"						
				M	ANSI flange PP 2 1/2"						
				Q	DIN flange VA Halar coated DN65						
				R	ANSI flange VA Halar coated 2 1/2"						
					Base plate						
					0	Base plate, painted steel					
					1	Base plate, stainless steel					
						Leakage sensor					
						0	without leakage sensor				
						L	with leakage sensor				
						M	as "L" + relay output				
							Rotor				
							0	Rotor with 2 shoes			
								Batch controller			
								0	without controller		
									Special version		
									0	Standard	
									H	Halar-coated housing	
										Vacuum system	
										0	without
										V	with vacuum system
											Approvals
											01 CE

* The pumps are factory-set to a maximum back pressure of 5 bar. Please specify deviating pressures when ordering.



2.8 Peristaltic Pump DULCO®flex

DULCO®flex DFDa 080 peristaltic pump

DFDa	Type											
	080	DFDa 080, 11.7 l/revolution										
		Power end/drive*										
		000	without drive unit									
		G11	4 kW, 12.5 rpm, 8.7 m^3/h, 5 bar (Reduction gear system), 3-phase, 230/400 V AC									
		G12	5.5 kW, 17.6 rpm, 12.3 m^3/h, 5 bar (Reduction gear system), 3-phase, 230/400 V AC									
		G13	7.5 kW, 12.5 rpm, 8.7 m^3/h, 15 bar (Reduction gear system), 3-phase, 230/400 V AC									
		G14	7.5 kW, 17.6 rpm, 12.3 m^3/h, 10 bar (Reduction gear system), 3-phase, 230/400 V AC									
		G15	7.5 kW, 20 rpm, 14 m^3/h, 7.5 bar (Reduction gear system), 3-phase, 230/400 V AC									
		G16	7.5 kW, 27.7 rpm, 19.4 m^3/h, 5 bar (Reduction gear system), 3-phase, 230/400 V AC									
		G17	11 kW, 30 rpm, 21 m^3/h, 5 bar (Reduction gear system), 3-phase, 230/400 V AC									
			Hose material									
			0	NR								
			B	NBR								
			E	EPDM								
				Hydraulic connections								
				I	DIN flange VA DN80							
				J	DIN flange PP DN80							
				L	ANSI flange VA 3"							
				M	ANSI flange PP 3"							
				Q	DIN flange VA Halar coated DN80							
				R	ANSI flange VA Halar coated 3"							
					Base plate							
					0	Base plate, painted steel						
						Leakage sensor						
						0	without leakage sensor					
						L	with leakage sensor					
						M	as "L" + relay output					
							Rotor					
							0	Rotor with 2 shoes				
								Batch controller				
								0	without controller			
									Special version			
									0	Standard		
										Vacuum system		
										0	without	
										V	with vacuum system	
											Approvals	
											01	CE

* The pumps are factory-set to a maximum back pressure of 5 bar. Please specify deviating pressures when ordering.



2.8 Peristaltic Pump DULCO®flex

DULCO®flex DFDa 100 peristaltic pump

DFDa	Type										
	100	DFDa 100, 20.0 l/revolution									
		Power end/drive*									
		000	without drive unit								
		F11	7.5 kW, 12 rpm, 14.4 m^3/h, 5 bar (Reduction gear system), 3-phase, 230/400 V AC								
		F12	11 kW, 18 rpm, 21.6 m^3/h, 5 bar (Reduction gear system), 3-phase, 230/400 V AC								
		F13	15 kW, 12 rpm, 14.4 m^3/h, 15 bar (Reduction gear system), 3-phase, 230/400 V AC								
		F14	15 kW, 18 rpm, 21.6 m^3/h, 10 bar (Reduction gear system), 3-phase, 230/400 V AC								
		F15	15 kW, 23 rpm, 27.6 m^3/h, 7.5 bar (Reduction gear system), 3-phase, 230/400 V AC								
		F16	15 kW, 28 rpm, 33.6 m^3/h, 5 bar (Reduction gear system), 3-phase, 230/400 V AC								
		F17	18.5 kW, 30 rpm, 36 m^3/h, 5 bar (Reduction gear system), 3-phase, 230/400 V AC								
			Hose material								
			0	NR							
			B	NBR							
			E	EPDM							
				Hydraulic connections							
				I	DIN flange VA DN100						
				J	DIN flange PP DN100						
				L	ANSI flange VA 4"						
				M	ANSI flange PP 4"						
				Q	DIN flange VA Halar coated DN100						
				R	ANSI flange VA Halar coated 4"						
					Base plate						
					0	Base plate, painted steel					
						Leakage sensor					
						0	without leakage sensor				
						L	with leakage sensor				
						M	as "L" + relay output				
							Rotor				
							0	Rotor with 2 shoes			
								Batch controller			
								0	without controller		
									Special version		
									0	Standard	
										Vacuum system	
										0	without
										V	with vacuum system
											Approvals
											01 CE

* The pumps are factory-set to a maximum back pressure of 5 bar. Please specify deviating pressures when ordering.



2.8 Peristaltic Pump DULCO®flex

2.8.6 Spare Parts

Spare Parts for DFAa 003

	Order no.
DFAa 003 silicone tube	1037107
DFAa 003 Norprene tube A-60-F	1037144
DFAa 003 Solva tube	1037145

Spare Parts for DFAa 008

	Order no.
DFAa 008 silicone tube	1037146
DFAa 008 Norprene tube A-60-G	1037147
DFAa 008 silicone tube	1037148
DFAa 008 Solva tube	1037149

Spare Parts for DFBa 010

	Order no.
DFBa 010 NR tube	1037150
DFBa 010 NBR tube	1037151
DFBa 010 EPDM tube	1037152
DFBa 010 NR-A tube	1037153
DFBa 010 NBR-A tube	1037154
DFBa 010 NORPRENE tube	1037155
DFBa 010 HYPALON tube	1037156

Spare Parts for DFBa 013

	Order no.
DFBa 013 NR tube	1037157
DFBa 013 NBR tube	1037158
DFBa 013 EPDM tube	1037159
DFBa 013 NR-A tube	1037160
DFBa 013 NBR-A tube	1037161
DFBa 013 NORPRENE tube	1037162
DFBa 013 HYPALON tube	1037163

Spare Parts for DFBa 016

	Order no.
DFBa 016 NR tube	1037164
DFBa 016 NBR tube	1037165
DFBa 016 EPDM tube	1037166
DFBa 016 NR-A tube	1037167
DFBa 016 NBR-A tube	1037168
DFBa 016 NORPRENE tube	1037169
DFBa 016 HYPALON tube	1037171

Spare Parts for DFBa 019

	Order no.
DFBa 019 TYGON tube	1037172
DFBa 019 NORPRENE tube	1037173



2.8 Peristaltic Pump DULCO®flex

Spare Parts for DFBa 022

	Order no.
DFBa 022 NR tube	1037175
DFBa 022 NBR tube	1037176
DFBa 022 EPDM tube	1037178
DFBa 022 NR-A tube	1037179
DFBa 022 NBR-A tube	1037180
DFBa 022 NORPRENE tube	1037181
DFBa 022 HYPALON tube	1037182

Spare Parts for DFCa 030

	Order no.
DFCa 030 NR tube	1037183
DFCa 030 NBR tube	1037184
DFCa 030 EPDM tube	1037185
DFCa 030 NR-A tube	1037186
DFCa 030 NBR-A tube	1037187
DFCa 030 tube NORPRENE	1045073

Spare Parts for DFCa 040

	Order no.
DFCa 040 NR tube	1037192
DFCa 040 NBR tube	1037193
DFCa 040 EPDM tube	1037194
DFCa 040 NR-A tube	1037195
DFCa 040 NBR-A tube	1037196
DFCa 040 NORPRENE tube	1037198

Spare Parts for DFCa 050

	Order no.
DFDa 040/DFCa 050 NR hose	1037199
DFDa 040/DFCa 050 NBR hose	1037201
DFDa 040/DFCa 050 EPDM hose	1037202
DFCa 050 NR-A tube	1037203
DFCa 050 NBR-A tube	1037204
DFCa 050 tube NORPRENE	1045084

Spare Parts for DFCa 060

	Order no.
DFCa 060 NR tube	1037206
DFCa 060 NBR tube	1037208
DFCa 060 EPDM tube	1037209
DFCa 060 NR-A tube	1037210
DFCa 060 NBR-A tube	1037211
DFCa 060 tube NORPRENE	1045085



2.8 Peristaltic Pump DULCO®flex

Spare Parts for DFCa 070

	Order no.
DFDa 070/DFCa 070 NR hose	1037213
DFDa 070/DFCa 070 NBR hose	1037214
DFDa 070/DFCa 070 EPDM hose	1037215
DFCa 070 NR-A hose	1037216
DFCa 070 NBR-A hose	1037217

Spare Parts for DFDa 025

	Order no.
DFDa 025 NR tube	1037219
DFCa 025 NBR tube	1037220
DFDa 025 EPDM tube	1037221

Spare Parts for DFDa 032

	Order no.
DFDa 032 NR tube	1037225
DFCa 032 NBR tube	1037226
DFDa 032 EPDM tube	1037227

Spare Parts for DFDa 040

	Order no.
DFDa 040/DFCa 050 NR hose	1037199
DFDa 040/DFCa 050 NBR hose	1037201
DFDa 040/DFCa 050 EPDM hose	1037202

Spare Parts for DFDa 060

	Order no.
DFDa 060 NR tube	1037236
DFCa 060 NBR tube	1037237
DFDa 060 EPDM tube	1037238

Spare Parts for DFDa 070

	Order no.
DFDa 070/DFCa 070 NR hose	1037213
DFDa 070/DFCa 070 NBR hose	1037214
DFDa 070/DFCa 070 EPDM hose	1037215

Spare Parts DFDa 080

	Order no.
DFDa 080 hose NR	1041677
DFDa 080 hose NBR	1041678
DFDa 080 hose EPDM	1041679

Spare Parts for DFDa 100

	Order no.
DFDa 100 NR tube	1037247
DFCa 100 NBR tube	1037248
DFDa 100 EPDM tube	1037249



2.9 Application Examples

2.9.1 Filling a Day Tank

Product:	**von Taine® centrifugal pump**
Metered medium:	**32% hydrochloric acid solution**
Sector:	**Food**
Application:	**Chemical transfer**

The von Taine® centrifugal pump is switched on and off automatically by the level control facility in the day tank.

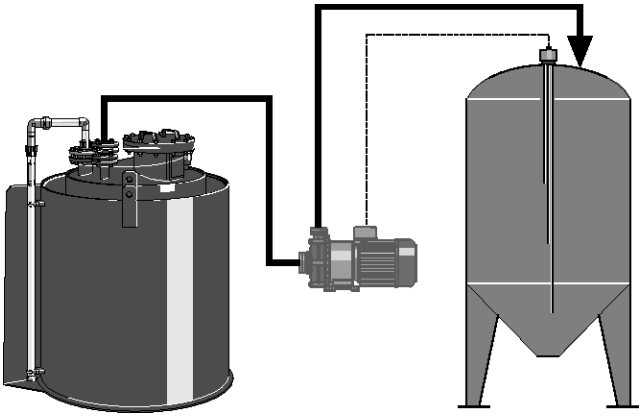

pk_3_050

Task and requirements

- Automatically filling service tanks with 32 % hydrochloric acid solution

Operating conditions

- Indoor operation
- Automatic activation of pump

Application information

- Centrifugal pump controlled by level control facility in metering tank
- The centrifugal pump is not self-priming and requires feed
- Hydrochloric acid compatibility of materials must be ensured (PP, PVDF; EPDM)
- Provide dry-running protection facility for centrifugal pump

Solution

- vonTaine® 1820 PP centrifugal pump
- Service tank with level control

Benefits

- Safe handling of hydrochloric acid
- Fully automatic operation with minimum personnel and maintenance requirements

2.9.2 Filling Day Tanks

Product:	**Duodos air-operated diaphragm pump**
Metered medium:	**Detergent**
Sector:	**Laundry**
Application:	**Chemical transfer**

The level control facility for the day tanks opens the solenoid valves when the level drops below minimum. With decreasing back pressure, the Duodos pump automatically begins to pump medium into the metering line and switches off when the maximum level in the tank is reached and the solenoid valve is switched off.

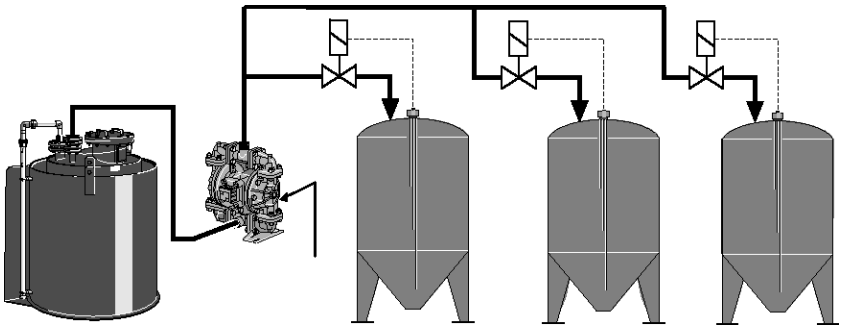

pk_3_051

Task and requirements

- Automatic filling of day tanks with detergent

Operating conditions

- Compressed air necessary for operating compressed air diaphragm pump
- Automatic filling of day tanks

Application information

- Compressed air diaphragm-type pump controlled by level control facility in metering tank
- The compressed air diaphragm pump is self-priming
- Also suitable for viscous media
- The level control facility for the day tanks opens the solenoid valves when the level drops below minimum. With decreasing back pressure, the compressed air diaphragm-type pump automatically begins to pump medium into the metering line and switches off when the maximum level in the tank is reached and the solenoid valve is switched off

Solution

- Duodos air-operated diaphragm pump
- Day tank with level control

Benefits

- Simplified logistics through central storage
- Fully automatic operation with minimum personnel and maintenance requirements

2.9 Application Examples

2.9.3 Deacidification of Potable Water

Product	**DULCO®flex peristaltic pump**
Feed chemical	**Lime milk 10%**
Sector:	**Potable water**
Application	**Feed of abrasive chemicals**

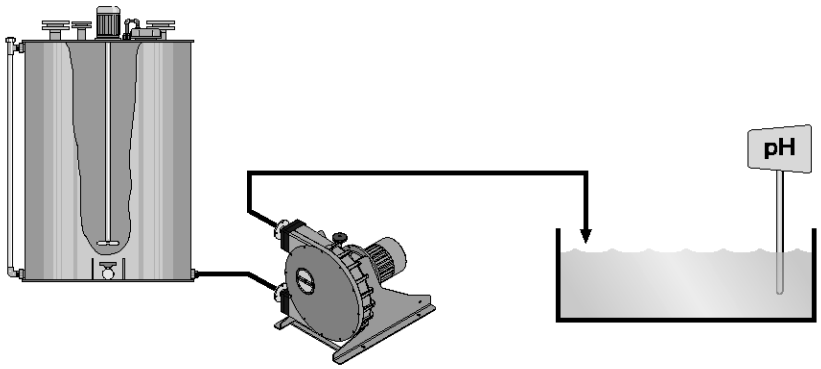

AP_PTW_0001_SW

Problems and requirements

- Feed of abrasive lime milk into potable water tanks
- Deacidification of the potable water

Operating conditions

- The lime milk comes as a 10% suspension
- The pH in the application tank is continuously measured

Notes on use

- The peristaltic pump is self-priming
- The pump is controlled by a pH measuring unit
- Speed reduction to extend the service life of the hose

Solution

- DULCO®flex DFCa 040 type peristaltic pump
- Hose material: NR (natural rubber)

Benefits

- Reliable feed of lime milk
- Fully automatic operation with minimum personnel and maintenance requirements

3.0 Overview of Metering Systems DULCODOS®

3.0.1 Selection Guide

Metering systems are ready mounted complete solutions, which are immediately available and ready for use for the most important applications. Whether standard or customised – you'll find the right solution here.

Tip: The table provides a good overview.

Selection Guide for DULCODOS® Metering Systems

Type	Function	Applications	Capacity range
DULCODOS® eco	Storing, metering	General	35 – 1,000 litres
DULCODOS® universal	Metering	General	–
DULCODOS® panel	Metering	General	0.74 – 1,000 l/h
DULCODOS® Hydrazin	Preparing, metering	Boiler feed water	up to 11 l/h
DULCODOS® PPLA	Mixing, metering	Animal food	–

Metering systems DULCODOS®

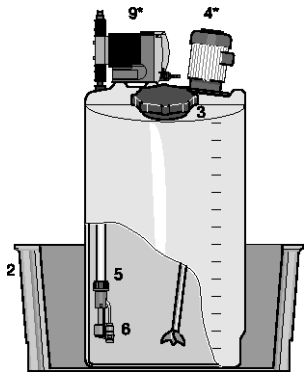

3.1 Metering System DULCODOS® eco

3.1.1 Metering System DULCODOS® eco

Choose from a range of different components and adapt the metering system to your requirements.

For storing and metering liquid chemicals Use a selection guide (identity code) to quickly and flexibly adapt your metering system to your metering task.

Two hydraulic connection points guarantee simple installation of the metering system. The ready mounted system consists of components that have been perfectly matched to each other to ensure problem-free operation. You obtain a complete system. Individually configure your metering system at the time of ordering. A simple selection system makes ordering easy and guarantees maximum efficiency even at the time of ordering.

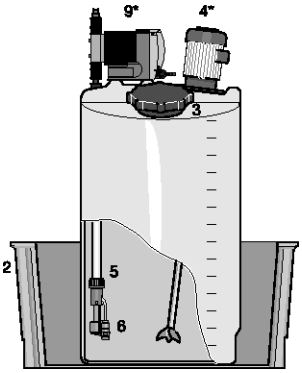

pk_3_033

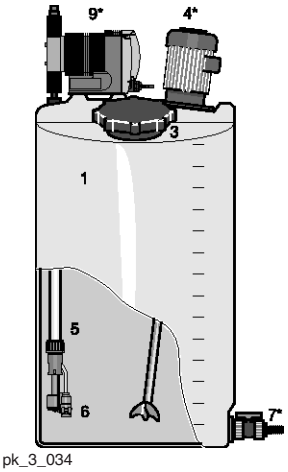

pk_3_034

Your benefits

- One to three metering pumps mounted on a storage tank, ready for connection with all the necessary accessories
- Short delivery time
- Outstanding value for money
- Compact construction
- Fast commissioning
- Versatile use
- All the components are perfectly matched to each other and fit precisely
- Environmentally-friendly handling of chemicals

Technical details

- Dosing tank: PE, various colours, 35 – 1,000 litres
- Collecting pan: PE, various colours, 35 – 1,000 litres
- Lock for screw top
- Hand mixer / stirrer: PP, PVDF or stainless steel, various outputs
- Suction assembly: PP, PVC, various connectors
- Level switch for suction assembly: 2 -stage
- Drain tap: PP, PVC, with ball valve
- Metering pump: alpha, Beta®, gamma/ X, Sigma/ 1, Sigma/ 2, Sigma/ 3

Field of application

Treatment of cooling, process and swimming pool water

ProMinent metering systems with PE storage tanks can be selected and ordered with the help of an identity code system. First select the metering pump using the separate pump identity code.

Selectable components

1. PE dosing tank (35 – 1,000 litres)
2. Stackable collecting pans (35 – 1,000 litres)
3. Lock for tank screw top
4. Hand mixer/stirrer (*)
5. Suction assembly
6. Level switch for suction assembly
7. Drain tap for storage tank (*)
8. Order metering pump (*) separately
   (Order the pump separately due to the large number of possible pumps that can be installed on storage tanks. Use the identity code for the pump you require.)

* These components are ready for subsequent installation, but are supplied separately to avoid damage in transit. Customers should fully install the system on site.

3.1 Metering System DULCODOS® eco

The following table shows the combination option of metering pump and storage tank:

	Tanks						
Metering pumps	**35 l**	**60 l**	**100 l**	**140 l**	**250 l**	**500 l**	**1000 l**
alpha	x+	x+	x	x+	x	x+	x+
Beta®	x+	x	x	x	x	x	x
gamma/ X	x+	x	x	x	x	x	x
Sigma/ 1	–	x+	x+	x+	x	x	x
Sigma/ 2	–	–	–	–	x	x+	x
Sigma/ 3	–	–	–	–	x	x+	x
delta®	–	x+	x+	x+	x	x	x

x = Direct assembly of the pump without mounting plate
x+ = Assembly of the pump with mounting plate

3.1.2 Identity Code Ordering System, 35 litres

Metering system with storage tank, 35 litres

DSBa	PE tank												
	0035N	35 l PE metering tank, neutral colour											
	0035S	35 l PE metering tank, black											
	0035B	35 l PE metering tank, blue											
	0035G	35 l PE metering tank, yellow											
	0035R	35 l PE metering tank, red											
		Collecting pan											
		0	without collecting pan										
		1	with collecting pan, neutral colour										
		2	with collecting pan, coloured (the same colour as the tank)										
			Version										
			0	with ProMinent® Logo									
				Lock for tank screw top									
				0	without lock								
					Hand mixer, stirrer								
					0	none							
					A	with PP hand mixer							
						Metering pump mounting							
						0	without pump						
						D	for alpha						
						E	for Beta®, gamma/ X						
							Suction assembly selection						
							0	without suction assembly					
							1	suction assembly with 6x4 suction hose					
							2	suction assembly with 8x5 suction hose					
							3	suction assembly with 12x9 suction hose					
								Suction assembly material					
								0	none				
								1	PVC				
								2	PP				
									Suction assembly float switch				
									0	without float switch			
									1	2-stage, round plug, (6 x 4, 8 x 5,12 x 9) for Beta®, gamma/ X			
										Accessories - discharge tap for tank			
										0	without accessories		
										1	with ball valve PVC, hose grommet d16 **		
										2	with ball valve PP, hose grommet d20 **		
											Calibration assembly		
											0	none	
												Info - pump*	
													e.g. BT4 1005 PPE 300AA000

* Please enter the Identity code of the selected pump

** Ball valve can only be selected if the metering station is ordered without drip pan.

*** Metering gauge can only be selected if the metering station is ordered without drip pan and without suction fitting.

3.1 Metering System DULCODOS® eco

3.1.3 Identity Code Ordering System, 60 litres

Metering system with storage tank, 60 litres

DSBa	PE tank												
	0060N	60 l PE metering tank, neutral colour											
	0060S	60 l PE metering tank, black											
	0060B	60 l PE metering tank, blue											
	0060G	60 l PE metering tank, yellow											
	0060R	60 l PE metering tank, red											
		Collecting pan											
		0	without collecting pan										
		1	with collecting pan, neutral colour										
		2	with collecting pan, coloured (the same colour as the tank)										
			Version										
			0	with ProMinent® Logo									
				Lock for tank screw top									
				1	with lock								
					Hand mixer, stirrer								
					0	none							
					A	with PP hand mixer							
					B	with PP hand stirrer							
					H	with stainless steel 0.02 kW electric stirrer							
					P	with PVDF 0.02 kW electric stirrer							
						Metering pump mounting							
						0	without pump						
						A	for Beta®, gamma/ X						
						D	for alpha						
						F	for Sigma/ 1						
						P	for delta®						
							Suction assembly selection						
							0	without suction assembly					
							1	suction assembly with 6x4 suction hose					
							2	suction assembly with 8x5 suction hose					
							3	suction assembly with 12x9 suction hose					
							4	suction assembly DN 10					
							5	suction assembly DN 15					
								Suction assembly material					
								0	none				
								1	PVC				
								2	PP				
									Suction assembly float switch				
									0	without float switch			
									1	2-stage, round plug, (6 x 4, 8 x 5,12 x 9) for Beta®, gamma/ X, delta®			
									2	2-stage, round plug, (DN 10-32) for Sigma/ 1/ 2/ 3, delta®			
										Accessories - discharge tap for tank			
										0	without accessories		
										1	with ball valve PVC, hose grommet d16 **		
										2	with ball valve PP, hose grommet d20 **		
											Calibration assembly		
											0	none	
												Info - pump*	
													e.g. GMXa 0414 PVT 20000UA

* Please enter the Identity code of the selected pump

** Ball valve can only be selected if the metering station is ordered without drip pan.

*** Metering gauge can only be selected if the metering station is ordered without drip pan and without suction fitting.



3.1.4 Identity Code Ordering System, 100 litres

Metering system with storage tank, 100 litres

DSBa	PE tank												
	0100N	100 l PE metering tank, neutral colour											
	0100S	100 l PE metering tank, black											
	0100B	100 l PE metering tank, blue											
	0100G	100 l PE metering tank, yellow											
	0100R	100 l PE metering tank, red											
		Collecting pan											
		0	without collecting pan										
		1	with collecting pan, neutral colour										
		2	with collecting pan, coloured (the same colour as the tank)										
			Version										
			0	with ProMinent® Logo									
				Lock for tank screw top									
				1	with lock								
					Hand mixer, stirrer								
					0	none							
					A	with PP hand mixer							
					C	with PP hand stirrer							
					I	with stainless steel 0.18 kW electric stirrer							
					R	with PVDF 0.18 kW electric stirrer							
						Metering pump mounting							
						0	without pump						
						A	for Beta®, gamma/ X						
						L	for Sigma/ 1						
						N	for alpha						
						P	for delta®						
							Suction assembly selection						
							0	without suction assembly					
							1	suction assembly with 6x4 suction hose					
							2	suction assembly with 8x5 suction hose					
							3	suction assembly with 12x9 suction hose					
							4	suction assembly DN 10					
							5	suction assembly DN 15					
								Suction assembly material					
								0	none				
								1	PVC				
								2	PP				
									Suction assembly float switch				
									0	without float switch			
									1	2-stage, round plug, (6 x 4, 8 x 5,12 x 9) for Beta®, gamma/ X, delta®			
									2	2-stage, round plug, (DN 10-32) for Sigma/ 1/ 2/ 3, delta®			
										Accessories - discharge tap for tank			
										0	without accessories		
										1	with ball valve PVC, hose grommet d16 **		
										2	with ball valve PP, hose grommet d20 **		
											Calibration assembly		
											0	none	
												Info - pump*	
													e.g. GMXa 0414 PVT 20000UA

* Please enter the Identity code of the selected pump

** Ball valve can only be selected if the metering station is ordered without drip pan.

*** Metering gauge can only be selected if the metering station is ordered without drip pan and without suction fitting.

3.1 Metering System DULCODOS® eco

3.1.5 Identity Code Ordering System, 140 litres

Metering system with storage tank, 140 litres

DSBa	PE tank											
	0140N	140 l PE metering tank, neutral colour										
	0140S	140 l PE metering tank, black										
	0140B	140 l PE metering tank, blue										
	0140G	140 l PE metering tank, yellow										
	0140R	140 l PE metering tank, red										
		Collecting pan										
		0	without collecting pan									
		1	with collecting pan, neutral colour									
		2	with collecting pan, coloured (the same colour as the tank)									
			Version									
			0	with ProMinent® Logo								
				Lock for tank screw top								
				1	with lock							
					Hand mixer, stirrer							
					0	none						
					A	with PP hand mixer						
					D	with PP hand stirrer						
					K	with stainless steel 0.18 kW electric stirrer						
					S	with PVDF 0.18 kW electric stirrer						
						Metering pump mounting						
						0	without pump					
						A	for Beta®, gamma/ X					
						D	for alpha					
						H	for Sigma/ 1					
						P	for delta®					
							Suction assembly selection					
							0	without suction assembly				
							1	suction assembly with 6x4 suction hose				
							2	suction assembly with 8x5 suction hose				
							3	suction assembly with 12x9 suction hose				
							4	suction assembly DN 10				
							5	suction assembly DN 15				
								Suction assembly material				
								0	none			
								1	PVC			
								2	PP			
									Suction assembly float switch			
									0	without float switch		
									1	2-stage, round plug, (6 x 4, 8 x 5,12 x 9) for Beta®, gamma/ X, delta®		
									2	2-stage, round plug, (DN 10-32) for Sigma/ 1/ 2/ 3, delta®		
										Accessories - discharge tap for tank		
										0	without accessories	
										1	with ball valve PVC, hose grommet d16 **	
										2	with ball valve PP, hose grommet d20 **	
											Calibration assembly	
											0	none
												Info - pump*
												e.g. GMXa 0414 PVT 20000UA

* Please enter the Identity code of the selected pump

** Ball valve can only be selected if the metering station is ordered without drip pan.

*** Metering gauge can only be selected if the metering station is ordered without drip pan and without suction fitting.



3.1.6 Identity Code Ordering System, 250 litres

Metering system with storage tank, 250 litres

DSBa	PE tank											
	0250N	250 l PE metering tank, neutral colour										
	0250S	250 l PE metering tank, black										
	0250B	250 l PE metering tank, blue										
	0250G	250 l PE metering tank, yellow										
	0250R	250 l PE metering tank, red										
		Collecting pan										
		0	without collecting pan									
		1	with collecting pan, neutral colour									
		2	with collecting pan, coloured (the same colour as the tank)									
			Version									
			0	with ProMinent® Logo								
				Lock for tank screw top								
				1	with lock							
					Hand mixer, stirrer							
					0	none						
					A	with PP hand mixer						
					E	with PP hand stirrer						
					L	with stainless steel 0.18 kW electric stirrer						
					T	with electric stirrer PVDF 0.18 kW						
						Metering pump mounting						
						0	without pump					
						A	for Beta®, gamma/ X					
						B	for Sigma/ 2/ 3					
						C	for Sigma/ 1					
						N	for alpha					
						P	for delta®					
							Suction assembly selection					
							0	without suction assembly				
							1	suction assembly with 6x4 suction hose				
							2	suction assembly with 8x5 suction hose				
							3	suction assembly with 12x9 suction hose				
							4	suction assembly DN 10				
							5	suction assembly DN 15				
							7	suction assembly DN 25				
							8	suction assembly DN 32				
								Suction assembly material				
								0	none			
								1	PVC			
								2	PP			
									Suction assembly float switch			
									0	without float switch		
									1	2-stage, round plug, (6 x 4, 8 x 5,12 x 9) for Beta®, gamma/ X, delta®		
									2	2-stage, round plug, (DN 10-32) for Sigma/ 1/ 2/ 3, delta®		
										Accessories - discharge tap for tank		
										0	without accessories	
										1	with ball valve PVC, hose grommet d16 **	
										2	with ball valve PP, hose grommet d20 **	
											Calibration assembly	
											0	none
												Info - pump*
												e.g. GMXa 0414 PVT 20000UA

* Please enter the Identity code of the selected pump

** Ball valve can only be selected if the metering station is ordered without drip pan.

*** Metering gauge can only be selected if the metering station is ordered without drip pan and without suction fitting.

3.1 Metering System DULCODOS® eco

3.1.7 Identity Code Ordering System, 500 litres

Metering system with storage tank, 500 litres

DSBa	PE tank											
	0500N	500 l PE metering tank, neutral colour										
	0500S	500 l PE metering tank, black										
	0500B	500 l PE metering tank, blue										
	0500G	500 l PE metering tank, yellow										
	0500R	500 l PE metering tank, red										
		Collecting pan										
		0	without collecting pan									
		1	with collecting pan, neutral colour									
		2	with collecting pan, coloured (the same colour as the tank)									
			Version									
			0	with ProMinent® Logo								
				Lock for tank screw top								
				1	with lock							
					Hand mixer, stirrer							
					0	none						
					A	with PP hand mixer						
					F	with PP hand stirrer						
					M	with stainless steel 0.25 kW electric stirrer						
					U	with PVDF 0.25 kW electric stirrer						
						Metering pump mounting						
						0	without pump					
						A	for Beta®, gamma/ X					
						C	for Sigma/ 1, delta®					
						D	for alpha					
						J	for Sigma/ 2/ 3					
						P	for delta®					
							Suction assembly selection					
							0	without suction assembly				
							1	suction assembly with 6x4 suction hose				
							2	suction assembly with 8x5 suction hose				
							3	suction assembly with 12x9 suction hose				
							4	suction assembly DN 10				
							5	suction assembly DN 15				
							7	suction assembly DN 25				
							8	suction assembly DN 32				
								Suction assembly material				
								0	none			
								1	PVC			
								2	PP			
									Suction assembly float switch			
									0	without float switch		
									1	2-stage, round plug, (6 x 4, 8 x 5,12 x 9) for Beta®, gamma/ X, delta®		
									2	2-stage, round plug, (DN 10-32) for Sigma/ 1/ 2/ 3, delta®		
										Accessories - discharge tap for tank		
										0	without accessories	
										1	with ball valve PVC, hose grommet d16 **	
										2	with ball valve PP, hose grommet d20 **	
											Calibration assembly	
											0	none
												Info - pump*
												e.g. GMXa 0414 PVT 20000UA

* Please enter the Identity code of the selected pump

** Ball valve can only be selected if the metering station is ordered without drip pan.

*** Metering gauge can only be selected if the metering station is ordered without drip pan and without suction fitting.

3.1.8 Identity Code Ordering System, 1000 litres

Metering system with storage tank, 1000 litres

DSBa	PE tank											
	1000N	1000 l PE metering tank, neutral colour										
	1000S	1000 l PE metering tank, black										
	1000B	1000 l PE metering tank, blue										
	1000G	1000 l PE metering tank, yellow										
	1000R	1000 l PE metering tank, red										
		Collecting pan										
		0	without collecting pan									
		1	with collecting pan, neutral colour									
		2	with collecting pan, black									
			Version									
			0	with ProMinent® Logo								
				Lock for tank screw top								
				1	with lock							
					Hand mixer, stirrer							
					0	none						
					G	with hand mixer PP						
					N	with stainless steel 0.75 kW electric stirrer						
					W	with PVDF 0.75 kW electric stirrer						
						Metering pump mounting						
						0	without pump					
						A	for Beta®, gamma/ X					
						B	for Sigma/ 2/ 3					
						C	for Sigma/ 1					
						D	for alpha					
						P	for delta®					
							Suction assembly selection					
							0	without suction assembly				
							1	suction assembly with 6x4 suction hose				
							2	suction assembly with 8x5 suction hose				
							3	suction assembly with 12x9 suction hose				
							4	suction assembly DN 10				
							5	suction assembly DN 15				
							7	suction assembly DN 25				
							8	suction assembly DN 32				
								Suction assembly material				
								0	none			
								1	PVC			
								2	PP			
									Suction assembly float switch			
									0	without float switch		
									1	2-stage, round plug, (6x4, 8x5, 12x9) for Beta®, gamma/ X, delta®		
									2	2-stage, round plug, (DN 10-32) for Sigma/ 1/ 2/ 3, delta®		
										Accessories - discharge tap for tank		
										0	without accessories	
										1	with ball valve PVC, hose grommet d16 **	
										2	with ball valve PP, hose grommet d20 **	
											Calibration assembly	
											0	none
												Info - pump*
												e.g. GMXa 0414 PVT 20000UA

* Please enter the Identity code of the selected pump

** Ball valve can only be selected if the metering station is ordered without drip pan.

*** Metering gauge can only be selected if the metering station is ordered without drip pan and without suction fitting.

3.2 Metering System DULCODOS® universal

3.2.1 Metering System DULCODOS® universal

Liquid chemicals are metered conveniently, cost-effectively and reliably

Pump volume depending on the selected pump 1 ml/h–75 l/h, back pressure 10-2 bar

The metering system DULCODOS® universal combines carefully selected standard components with the solenoid driven metering pump you have selected. This is your convenient method for the reliable metering of liquid chemicals – and is available cost-effectively and extremely quickly thanks to the preconfigured modules.

Metering is dependent on the metering pump. Components, such as pipes, relief valves and electrics – indispensable, but scarcely variable – ensure the reliable operation of the system. That is why we have pre-configured the new metering system DULCODOS® universal with these standards. The benefits for you: low costs, fast delivery, simple commissioning.

Naturally you have a choice here as well: Should it be the solenoid driven metering pump Beta® 4 or 5, delta® or gamma/ X? Should the pipes and seals be made of PP/FKM or PVC/EPDM? And do you need one or two points of injection with one or two pumps?

The novel valve block gives every metering system a clearly arranged structure. Every system is equipped with two relief valves, a collecting pan with leakage sensor and a calibration tank for controlled metering for complete operational safety.

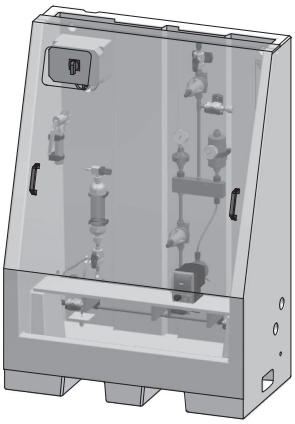

P_DST_0004_SW_3D
DULCODOS® Universal, type 1

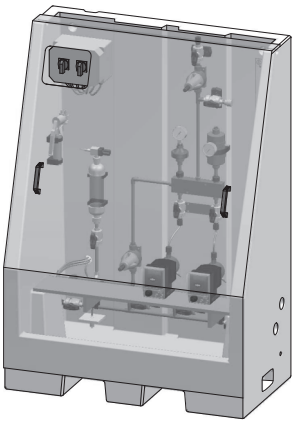

P_DST_0006_SW_3D
DULCODOS® Universal, type 2

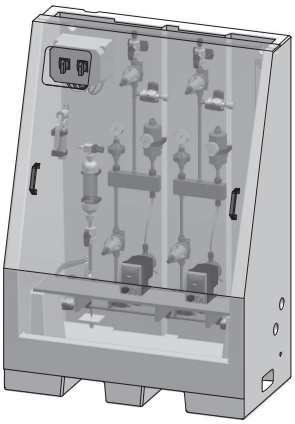

P_DST_0005_SW_3D
DULCODOS® Universal, type 3

Your benefits

- Reliable and precise metering of liquid chemicals with proven solenoid driven metering pumps
- Safe operation thanks to relief valves and collecting pan
- Stable installation frame rotationally sintered from a single piece
- Systems with 1 or 2 pumps and 1 or 2 points of injection
- Calibration unit with priming function for controlled metering
- Optional: Pulsation dampener, spray guard

Technical details

- ProMinent solenoid driven metering pumps Beta® 4/5, delta® or gamma/ X
- Dimensions: 1,700 x 1,200 x 635 mm (H x W x D)
- Material combinations: PP/FKM or PVC/EPDM (note compatibility with the feed chemical)
- Relief valves to protect the pipework
- Manometer
- Collecting pan with leakage sensor
- Flushing connectors
- Terminal box with master switch
- Assembly frame available in 6 standard colours

Field of application

Metering of liquid chemicals, e.g.

- cooling water treatment
- Waste water and process water treatment
- Paper industry

Type selection

	Metering pumps	Points of injection	Material combinations	Hose materials
Type 1	1	1	PVC/EPMD or PP/FPM	PVC, PE, PVDF
Type 2	2	1	PVC/EPMD or PP/FPM	PVC, PE, PVDF
Type 3	2	2	PVC/EPMD or PP/FPM	PVC, PE, PVDF

3.3 Metering System DULCODOS® panel

3.3.1 Metering System DULCODOS® panel

A large number of metering tasks are similar or are repeated. We offer a complete ready mounted solution.

Metering systems are immediately available and ready for use for the most important applications. Sensors, controller and metering pumps form a single unit with the required storage tanks, which can take over your work without any installation effort.

Two hydraulic connection points guarantee simple installation of the metering system. The ready mounted systems consist of components that have been perfectly matched to each other to ensure problem-free operation. You obtain a complete system. Individually configure your metering systems at the time of ordering. A simple selection system makes ordering easy and guarantees maximum efficiency even at the time of ordering.

Your benefits

- DULCODOS® panel plate-mounted metering systems Ready assembled on a mounting plate, with pipework fitted and complete with all hydraulic and electrical accessories
- Compact construction
- Fast project planning
- Flexible thanks to modular construction
- Proven many times over

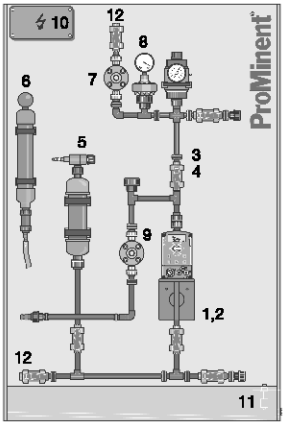

pk_7_070
Metering system with simple pump

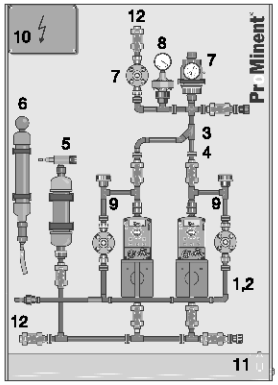

pk_7_061
Metering system with stand-by pump

Field of application

- Metering of biocides and inhibitors in cooling water
- Metering of lyes and acids for pH regulation
- Metering of coagulants (iron-III-chloride) for waste water treatment
- Metering of detergents (CIP (cleaning in place) systems and bottle washing machines)

Panel-mounted metering systems can be selected and ordered with the help of an identity code system.

First of all, select and order the metering and standby pump using the separate pump identity code.

The following options can be selected:

1. Assembly frame with pipework for installation of a metering pump
2. Extension for installation of a standby pump (same type as the metering pump)
3. Pipework material
4. Seal material
5. Vacuum cylinder
6. Vacuum pump
7. Pulsation damper
8. Manometer
9. Overflow device
10. Terminal box
11. Leakage sensor
12. Connections for the suction and discharge side

Technical Data

Type		B410	B510	GX10	S110	S115	S215	S220	S325	S332
Nominal width of pipework		DN 10	DN 10	DN 10	DN 10	DN 15	DN 15	DN 20	DN 25	DN 32
Nominal width of flushing connector		DN 10	DN 10	DN 10	DN 10	DN 10	DN 10	DN 15	DN 20	DN 25
Connector return line		DN 10	DN 10	DN 10	DN 10	DN 10	DN 10	DN 15	DN 20	DN 25
Dimensions H x W x D	mm	1,200 x 800 x 300	1,200 x 800 x 300	1,200 x 800 x 300	1,400 x 900 x 450	1,400 x 900 x 450	1,400 x 900 x 450	1,400 x 900 x 450	1,600 x 900 x 500	1,600 x 900 x 500
Dimensions H x W x D with 2 pumps	mm	1,400 x 1,000 x 300	1,400 x 1,000 x 300	1,400 x 1,000 x 300	1,600 x 1,200 x 450	1,600 x 1,200 x 450	1,600 x 1,200 x 450	1,600 x 1,200 x 450	1,600 x 1,200 x 500	1,600 x 1,200 x 500
Max. capacity	l/h	19	32	32	65	120	130	350	324	1,000
Max. operating pressure (25 °C)	bar	10	10	10	10	10	10	10	10	8*/10
Max. operating pressure (40 °C)	bar	6	6	6	6	6	6	6	6	6

* with pulsation damper option

3.3 Metering System DULCODOS® panel

3.3.2 Identity Code Ordering System, Beta® and gamma/ X, DN 10

Panel-mounted metering systems for Beta® and gamma/ X, DN 10

DSWa	**Mounting frame with pipework for installation of one metering pump (order metering pump separately)**													
	B410	For Beta®, DN 10 (BT4b 1000 - 0220: 0.74 - 19 l/h)												
	B510	For Beta®, DN 10 (BT5b 1605 - 0232: 4.1 - 32 l/h)												
	GL10	for gamma/ X, DN 10 (GMXa 1602 – 0245: 2.3 – 45 l/h)												
		Extension for installation of a standby pump (order standby pump separately)												
		0	none											
		1	with extension for standby pump (same type as metering pump)											
			Pipe material											
			PC	PVC										
			PP	PP										
				Seal material										
				E	EPDM									
				A	FKM									
					Vacuum cylinder									
					0	none								
					1	with vacuum cylinder								
						Vacuum pump								
						0	none							
						1	with vacuum pump							
							Pulsation damper							
							0	none						
							1	with pulsation damper (incl. back pressure valve)						
								Pressure gauge						
								0	none					
								1	with pressure gauge and diaphragm seal unit					
									Relief valve assembly					
									0	with multifunctional valve (for 1 pump of type: 1602 – 0220)				
									1	with multifunctional valve (for 1 pump of type: 1009 – 0245)				
									2	with back pressure valve (for 1 pump)				
									3	with multifunctional valve (for 2 pumps of type: 1602 – 0220)				
									4	with multifunctional valve (for 2 pumps of type: 1009 – 0245)				
									5	with back pressure valves (for 2 pumps)				
										Terminal box				
										0	without terminal box			
										1	with terminal box for 1 pump			
										2	with terminal box for 2 pumps			
										3	with terminal box + master switch for 1 pump			
										4	with terminal box + 2 master switches for 2 pumps			
											Leakage sensor in drip tray			
											0	without leakage sensor		
											1	with leakage sensor		
												Suction/discharge side connection parts		
												0	with solvent/fusion weld sockets	
												1	with 6x4 hose barb	
												2	with 8x5 hose barb	
												3	with 12x6 hose barb	
												4	with 12x9 hose barb	
												5	with DN 10 hose barb	
													Info - pump*	
														e.g. GMXa 0414 PVT 20000UA

* Please enter the Identity code for your chosen pump



3.3.3 Identity Code Ordering System for Sigma/ 1, DN 10

Panel-mounted metering systems for Sigma/ 1, DN 10

DSWa	**Mounting frame with pipework for installation of one metering pump (order metering pump separately)**												
	S110	Sigma/ 1, DN 10 (S1Cb/S1Ba 12017 - 07065: 20 - 65 l/h)											
		Extension for installation of a standby pump (order standby pump separately)											
		0	none										
		2	with extension for standby pump (same type as metering pump)										
			Pipe material										
			PC	PVC									
			PP	PP									
				Seal material									
				E	EPDM								
				A	FKM								
					Vacuum cylinder								
					0	none							
					2	with vacuum cylinder							
						Vacuum pump							
						0	none						
						1	with vacuum pump						
							Pulsation damper						
							0	none					
							2	with pulsation damper (incl. back pressure valve)					
								Pressure gauge					
								0	none				
								1	with pressure gauge and diaphragm seal unit				
									Relief valve assembly				
									6	with relief valve assembly			
										Terminal box			
										0	without terminal box		
										1	with terminal box for 1 pump		
										2	with terminal box for 2 pumps		
										3	with terminal box + master switch for 1 pump		
										4	with terminal box + 2 master switches for 2 pumps		
											Leakage sensor in drip tray		
											0	without leakage sensor	
											1	with leakage sensor	
												Suction/discharge side connection parts	
												0	with straight solvent/fusion sockets
												6	with DN 10 hose connector
													Info - pump*
													e.g.: S1Ba H12017 PVT0110M000

* Please enter the Identity code for your chosen pump

3.3 Metering System DULCODOS® panel

3.3.4 Identity Code Ordering System for Sigma/ 1, DN 15

Panel-mounted metering systems for Sigma/ 1, DN 15

DSWa	**Mounting frame with pipework for installation of one metering pump (order metering pump separately)**												
	S115	Sigma/ 1, DN 15 (S1Cb/S1Ba 07042 - 04120: 50 - 120 l/h)											
		Extension for installation of a standby pump (order standby pump separately)											
		0	none										
		3	with extension for standby pump (same type as metering pump)										
			Pipe material										
			PC	PVC									
			PP	PP									
				Seal material									
				E	EPDM								
				A	FKM								
					Vacuum cylinder								
					0	none							
					3	with vacuum cylinder							
						Vacuum pump							
						0	none						
						1	with vacuum pump						
							Pulsation damper						
							0	none					
							3	with pulsation damper (incl. back pressure valve)					
								Pressure gauge					
								0	none				
								1	with pressure gauge and diaphragm seal unit				
									Relief valve assembly				
									6	with relief valve assembly			
										Terminal box			
										0	without terminal box		
										1	with terminal box for 1 pump		
										2	with terminal box for 2 pumps		
										3	with terminal box + master switch for 1 pump		
										4	with terminal box + 2 master switches for 2 pumps		
											Leakage sensor in drip tray		
											0	without leakage sensor	
											1	with leakage sensor	
												Suction/discharge side connection parts	
												0	with straight solvent/fusion sockets
												7	with DN 15 hose connector
													Info - pump*
													e.g.: S1Ba H07042 PVT0110M000

* Please enter the Identity code for your chosen pump



3.3.5 Identity Code Ordering System for Sigma/ 2, DN 15

Panel-mounted metering systems for Sigma/ 2, DN 15

DSWa	Mounting frame with pipework for installation of one metering pump (order metering pump separately)												
	S215	Sigma/ 2, DN 15 (S2Cb/S2Ba 16050 – 16130: 60 – 130 l/h)											
		Extension for installation of a standby pump (order standby pump separately)											
		0	none										
		4	with extension for standby pump (same type as metering pump)										
			Pipe material										
			PC	PVC									
			PP	PP									
				Seal material									
				E	EPDM								
				A	FKM								
					Vacuum cylinder								
					0	none							
					4	with vacuum cylinder							
						Vacuum pump							
						0	none						
						1	with vacuum pump						
							Pulsation damper						
							0	none					
							4	with pulsation damper (incl. back pressure valve)					
								Pressure gauge					
								0	none				
								1	with pressure gauge and diaphragm seal unit				
									Relief valve assembly				
									6	with relief valve assembly			
										Terminal box			
										0	without terminal box		
										1	with terminal box for 1 pump		
										2	with terminal box for 2 pumps		
										3	with terminal box + master switch for 1 pump		
										4	with terminal box + 2 master switches for 2 pumps		
											Leakage sensor in drip tray		
											0	without leakage sensor	
											1	with leakage sensor	
												Suction/discharge side connection parts	
												0	with straight solvent/fusion sockets
												8	with DN 15 hose connector
													Info - pump*
													e.g.: S2Ba HM16050 PVT0110M000

* Please enter the Identity code for your chosen pump

3.3 Metering System DULCODOS® panel

3.3.6 Identity Code Ordering System for Sigma/ 2, DN 20

Panel-mounted metering systems for Sigma/ 2, DN 20

DSWa	**Mounting frame with pipework for installation of one metering pump (order metering pump separately)**												
	S220	Sigma/ 2, DN 20 (S2Cb/S2Ba 07120 – 04350: 120 – 350 l/h)											
		Extension for installation of a standby pump (order standby pump separately)											
		0	none										
		5	with extension for standby pump (same type as metering pump)										
			Pipe material										
			PC	PVC									
			PP	PP									
				Seal material									
				E	EPDM								
				A	FKM								
					Vacuum cylinder								
					0	none							
					5	with vacuum cylinder							
						Vacuum pump							
						0	none						
						1	with vacuum pump						
							Pulsation damper						
							0	none					
							5	with pulsation damper (incl. back pressure valve)					
								Pressure gauge					
								0	none				
								1	with pressure gauge and diaphragm seal unit				
									Relief valve assembly				
									6	with relief valve assembly			
										Terminal box			
										0	without terminal box		
										1	with terminal box for 1 pump		
										2	with terminal box for 2 pumps		
										3	with terminal box + master switch for 1 pump		
										4	with terminal box + 2 master switches for 2 pumps		
											Leakage sensor in drip tray		
											0	without leakage sensor	
											1	with leakage sensor	
												Suction/discharge side connection parts	
												0	with straight solvent/fusion sockets
												9	with DN 20 hose connector
													Info - pump*
													e.g.: S2Ba HM07120 PVT0110M000

* Please enter the Identity code for your chosen pump



3.3.7 Identity Code Ordering System for Sigma/ 3, DN 25

Panel-mounted metering systems for Sigma/ 3, DN 25

DSWa	Mounting frame with pipework for installation of one metering pump (order metering pump separately)												
	S325	Sigma/ 3, DN 25 (S3Cb 120145 - 120330: 174 - 324 l/h)											
		Extension for installation of a standby pump (order standby pump separately)											
		0	none										
		6	with extension for standby pump (same type as metering pump)										
			Pipe material										
			PC	PVC									
			PP	PP									
				Seal material									
				E	EPDM								
				A	FKM								
					Vacuum cylinder								
					0	none							
					6	with vacuum cylinder							
						Vacuum pump							
						0	none						
						1	with vacuum pump						
							Pulsation damper						
							0	none					
							6	with pulsation damper (incl. back pressure valve)					
								Pressure gauge					
								0	none				
								1	with pressure gauge and diaphragm seal unit				
									Relief valve assembly				
									6	with relief valve assembly			
										Terminal box			
										0	without terminal box		
										1	with terminal box for 1 pump		
										2	with terminal box for 2 pumps		
										3	with terminal box + master switch for 1 pump		
										4	with terminal box + 2 master switches for 2 pumps		
											Leakage sensor in drip tray		
											0	without leakage sensor	
											1	with leakage sensor	
												Suction/discharge side connection parts	
												0	with straight solvent/fusion sockets
												A	with DN 25 hose connector
													Info - pump*
													e.g.: S3Ba H120145 PVT0110M000

* Please enter the Identity code for your chosen pump

3.3 Metering System DULCODOS® panel

3.3.8 Identity Code Ordering System for Sigma/ 3, DN 32

Panel-mounted metering systems for Sigma/ 3, DN 32

DSWa	**Mounting frame with pipework for installation of one metering pump (order metering pump separately)**												
	S332	Sigma/ 3, DN 32 (S3Cb 070410 - 041030: 492 - 1000 l/h)											
		Extension for installation of a standby pump (order standby pump separately)											
		0	none										
		7	with extension for standby pump (same type as metering pump)										
			Pipe material										
			PC	PVC									
			PP	PP									
				Seal material									
				E	EPDM								
				A	FKM								
					Vacuum cylinder								
					0	none							
					7	with vacuum cylinder							
						Vacuum pump							
						0	none						
						1	with vacuum pump						
							Pulsation damper						
							0	none					
							7	with pulsation damper (incl. back pressure valve)					
								Pressure gauge					
								0	none				
								1	with pressure gauge and diaphragm seal unit				
									Relief valve assembly				
									6	with relief valve assembly			
										Terminal box			
										0	without terminal box		
										1	with terminal box for 1 pump		
										2	with terminal box for 2 pumps		
										3	with terminal box + master switch for 1 pump		
										4	with terminal box + 2 master switches for 2 pumps		
											Leakage sensor in drip tray		
											0	without leakage sensor	
											1	with leakage sensor	
												Suction/discharge side connection parts	
												0	with straight solvent/fusion sockets
												B	with DN 32 hose connector
													Info - pump*
													e.g.: S3Ba H070410 PVT0110M000

* Please enter the Identity code for your chosen pump

3.4 DULCODOS® Hydrazin Metering Systems

3.4.1 Metering System DULCODOS® Hydrazin

Corrosion is the last thing you need with the majority of applications. That is why Hydrazin protects.

Chemical tank ranging from 140 to 250 litres

DULCODOS® Hydrazin batching and metering systems are used for manual batching and automatic metering of diluted hydrazine solutions. And, of course, they also comply with all environmental and safety requirements.

Hydrazine acts as an oxygen binding agent, is volatile in steam and prevents corrosion. As it is carcinogenic, the dispensing and metering systems need to be gas-tight so that no hydrazine vapours can escape. Our systems comply with these requirements.

Your benefits

- Gas-tight design
- Precise metering
- Protects the environment

Field of application

- Steam circuits
- Power plants

Hydrazine is used as an oxygen binding agent in the process water sector, predominantly with steam generation. It is a carcinogenic agent and special care is therefore needed when handling it.

It therefore has to be ensured that the activation threshold for hydrazine is not exceeded with correct and proper use of closed and gas-tight systems.

Design

Ready-to-use assembled metering system essentially consisting of:

- Gas-tight chemical tank made of PE with a litre scale, with lockable screw lid and manual stirrer
- Each with a dispensing and metering pump with suction assembly, level switch, as well as complete rigid PVC pipework with two ball valves, the measuring tank and activated charcoal filter

Accessories

5 m metering line 8/12 mm Ø and stainless steel metering valve 8 mm Ø/1/2"

Electrical connection 230 V ±10%, 50…60 Hz

The metering system is supplied with a hose connection, which fits on a conventional drain system. This drain system is produced by MicroMatic, Gräfelfing/Munich.

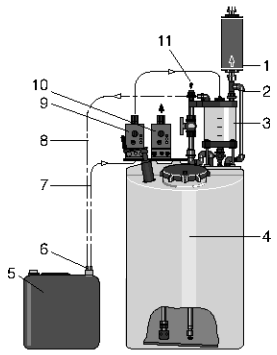

pk_7_078

1 Activated charcoal filter
2 Bleed/vent line
3 Apportioning unit
4 Metering tank
5 Hydrazin 15 returnable canister
6 Quick release coupling
7 Metering line
8 Gas shuttle line
9 Refilling pump
10 Metering pump
11 Fill water

Hydrazine Dispensing and Metering System, Completely Ready Mounted

Metering Tank Contents	Metering pump Capacity	Metering pump Feed Rate	Transfer Pump Discharge Flow	Order no.
130 l	7.1 l/h	7.0 bar	17 l/h	913018
250 l	11.0 l/h	7.0 bar	32 l/h	913019

Accessories

	Order no.
Sampling set, stainless steel	1003964

3.5 DULCODOS® PPLA Liquid Enzyme Metering Systems

3.5.1 Metering System DULCODOS® PPLA

For the animal feed industry: Ensuring pet food is further enriched with essential nutrients.

DULCODOS® PPLA systems "enhance" animal feeds: Liquid additives are coated on the pressed feed pellets. The systems operate on a modular principle: extensions and additions are possible at all times. And at the same time a complete solution for storage, dispensing and application of all types of additives.

The metering of liquid products plays a decisive role in the production of animal feed. Vitamins and enzymes are probably the best known types of liquid additives. The raw materials for the feed are milled, mixed and then pressed into pellets. DULCODOS® PPLA metering stations apply liquid additives to the feed after pelleting. The liquid products are stored in a container and transported by means of a filling pump into the metering station's daily storage tanks. Water is used as a carrier substance to guarantee the necessary even distribution of additives in the feed. One pump is used for the additives, a second pump for the dilution water. The additives and the water are combined in the mixing station and thoroughly mixed by a static mixer. The diluted additives are sprayed onto the animal feed through a nozzle. Standard solutions within a range of less than 50 ppm to over 1000 ppm are possible.

Your benefits

- Fast project planning
- Precise metering

Field of application

- Continuous flow processes
- Batch processes

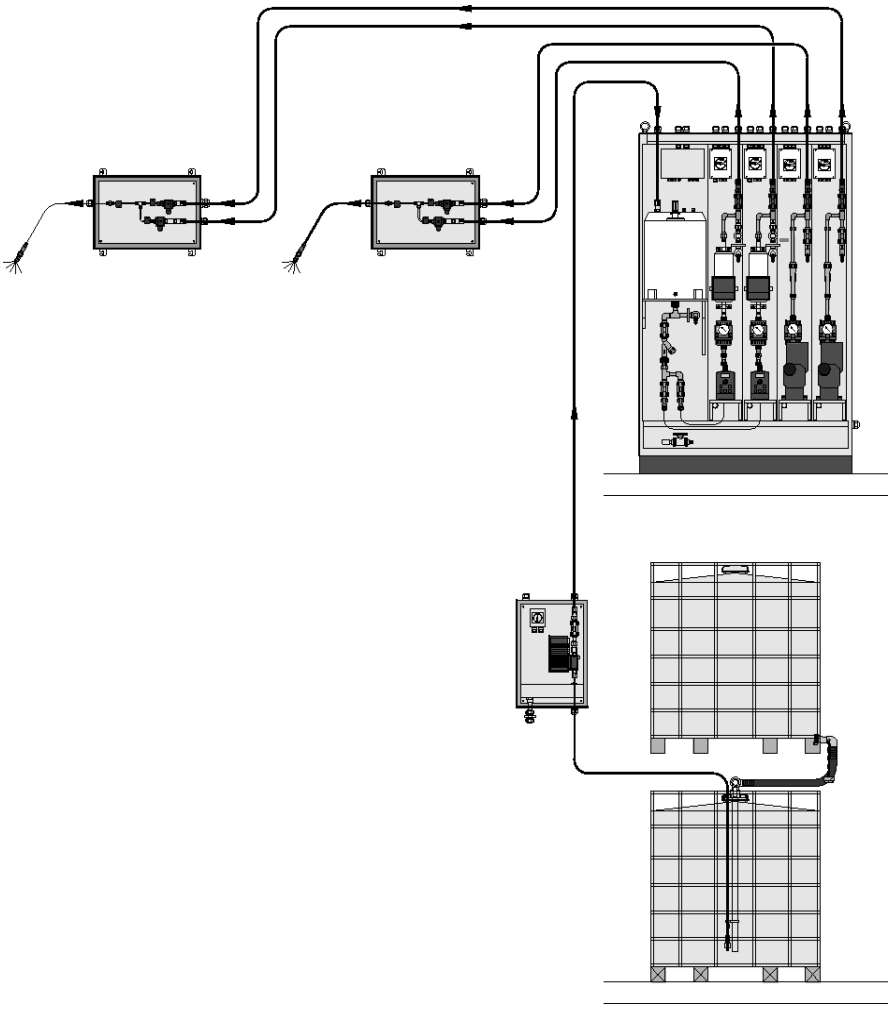

pk_4_PPLA

Prices and delivery time on request

3.6 Metering System DULCODOS® modular

3.6.1 Metering System DULCODOS® modular

Modular and flexible for precise metering

Capacity: 40 – 1,000 l/h, other capacities on request

The ready-wired modular metering system DULCODOS® is used for the ultra-precise metering of chemicals. It has a modular design and can be flexibly integrated into the most varied applications.

The modular construction of the modular metering systems DULCODOS® enables them to be practically and flexibly coordinated with your process. The metering systems are delivered ready mounted and can be quickly and easily installed. Metering systems DULCODOS® are winning customers over with their precise output all by themselves!

Your benefits

- Simple and quick to install, thanks to ready-wired design
- Modular construction for flexible, practical process integration
- Minimal stock of spare parts and short delivery times due to the use of standard parts and components
- Minimal space requirements due to compact construction
- Metering is controlled by pump electronics

Technical details

Basic version

- Modular configuration options
- Plastic or stainless steel brackets
- Pipework: PP, PVC or PVDF
- Motor Driven Metering Pump Sigma
- Other capacities on request
- Extensive optional accessories
- Relief valve and non-return valve
- Shut-off device with flushing connector (discharge side)
- Repair switch

Options for advanced version

- Pulsation damper with back pressure valve
- Manometer
- Routed pipework for suction and relief lines
- Terminal box with repair switch
- Splash guard

Field of application

Metering of chemicals: Cleaning agents, disinfectants, additives and auxiliary agents

3.7 Application Examples

3.7.1 Proportional Metering of Phosphate

Product:	**DULCODOS® eco**
Feed chemical:	**Phosphate**
Industry:	**Potable water**
Application:	**Potable water conditioning**

The liquid phosphate is added to the potable water proportional to the volume. The flow meter sends pulses to the gamma/ L pump. The metering volume is adjusted by increasing or decreasing the incoming pulses.

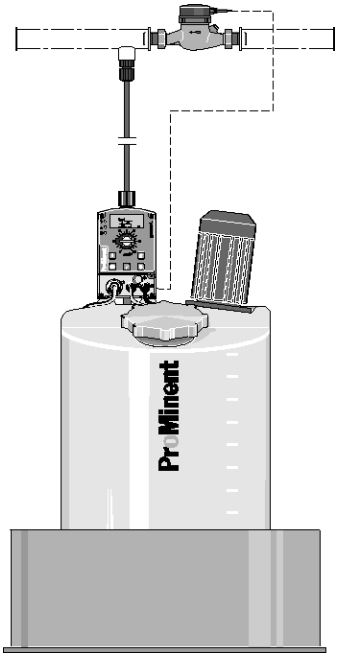

pk_7_093

Tasks and requirements

Metering of phosphate to potable water to prevent lime deposits and corrosion in the piping

Operating conditions

- Treatment of potable water
- Fluctuating water demand
- Water temperature between 4 – 30 °C

Application information

- Proportional metering of phosphate depending on the water supply
- Control of the metering pump by a contact water meter
- Measurement of the metering pump capacity during commissioning

Solution

- DULCODOS® eco with 140-litre metering tank and drip pan
- gamma/ L with contact input and pulse control
- Contact water meter

Benefits

- Constant solution concentration even minimal fluctuating water supply
- Fully-automatic operation with minimal staff and maintenance
- Flexible process design thanks to adaptation of the pump to various concentration demands



3.7.2 Inhibitor Metering in Cooling Water

Product: **DULCODOS® panel**
Feed chemical: **Corrosion inhibitor**
Industry: **Process industry**, **power stations**
Application: **Cooling water conditioning**

The corrosion inhibitor is added to the fresh water in proportion to the volume. The water meter detects the supply water volume and sends the pulses to the gamma/ L pump.

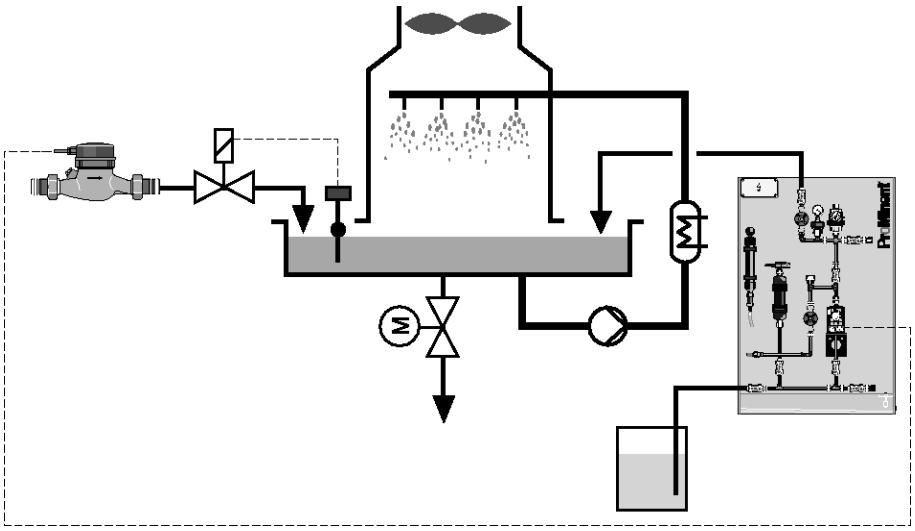

pk_7_060_1

Tasks and requirements

Metering of corrosion inhibitors to supply water to prevent lime deposits and corrosion in the cooling water circuit.

Operating conditions

- Treatment of flow water
- Fluctuating water demand
- Water temperature between 4 – 20 °C

Application information

- Proportional metering of inhibitor depending on the water supply
- Control of the metering pump by a contact water meter
- Calibration of the metering pump capacity during commissioning

Solution

- DULCODOS® panel including standby pump
- gamma/ L with contact input and pulse control
- Contact water meter

Benefits

- Protection against corrosion in the pipework and heat exchanger
- Constant solution concentration even with fluctuating water supply
- Fully-automatic operation with minimal staff and maintenance
- Flexible process design thanks to adaptation of the pump to various concentration demands

3.7 Application Examples

3.7.3 Inhibitor Metering in Boiler Feed Water

Product: **DULCODOS® Hydrazin**
Feed chemical: **Oxygen binding agent**
Industry: **Process industry**, **power stations**
Application: **Boiser feed water treatment**

The oxygen binding agent is added to the fresh water in proportion to the volume. The water meter detects the supply water volume and sends pulses to the gamma/ L pump on the hydrazine unit.

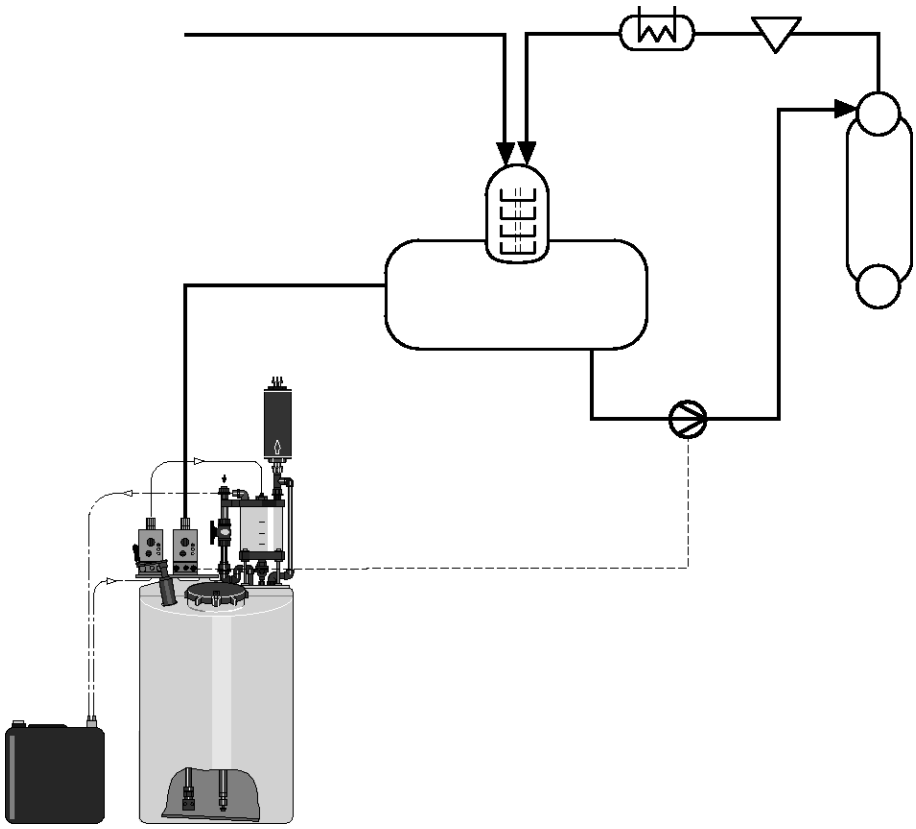

pk_7_095

Tasks and requirements

Metering of oxygen binding agent to the boiler feed water to prevent oxygen corrosion in the boiler area.

Operating conditions

- Fully desalinated potable water
- Continuous operation

Application information

- Proportional metering of oxygen binding agent depending on the boiler feed water
- The 15% concentrate is metered by a metering pump using a measuring unit into the metering tank and is diluted with water to produce a 1% metering solution
- Measurement of the metering pump capacity during commissioning

Solution

- DULCODOS® Hydrazin with 250-litre metering tank

Benefit

- Semi-automatic operation
- Flexible process design thanks to adaptation of the pump to various concentration demands



4.0 Systems for Domestic Water Installations

4.0.1 Proportional Flow Dosing System for Liquid Dosing

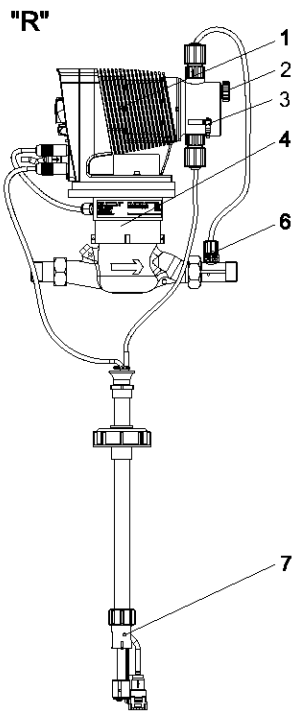

P_NM_0004_SW1

1 Metering pump
2 Bleed valve
3 Bypass hose sleeve
4 Contact water meter
5 Wall bracket
6 Injection valve
7 Suction lance with level switch

Promatik®

Metering units protect pipework, fittings, and appliances, such as boilers, washing machines and dishwashers, from corrosion and limescale. Active substances, like silicate, phosphate or silicate phosphate mixtures, can be metered here. These active substances form a protective layer in the pipework and reduce aggressiveness and sedimentation in the water.

Silicate

As a corrosion inhibitor to prevent rust formation: "brownish water" in galvanised piping systems, "pitting": needle-like holes in the pipework. Applications include soft, corrosive types of water with a high percentage of aggressive carbonic acid. The silicate is used to raise the pH value closer to a lime-carbonic acid equilibrium. Hydrolysis produces a silica gel that forms a thin protective layer in the pipework and fittings and thus prevents corrosion.

Phosphate

As ortho and polyphosphate to prevent limescale and corrosion in hard water up to max. 20 CH (carbonate hardness). Hard water salts, such as calcium and magnesium ions, responsible for limescale are thereby stabilised, i.e. these ions remain dissolved in the water and do not form limescale on the pipe walls. Growth on the pipes is thus prevented and there are no deposits of limescale on heating coils, dramatically reducing their efficiency. A thin, solid protective layer is formed. Mixtures containing silicate and phosphate act as corrosion and limescale inhibitors for soft and medium-hard water. The continuous top-up of the feed chemical is required to maintain this protective layer, otherwise it will degrade within a few days.

EXACTAPHOS®

EXACTAPHOS® metering solutions are matched to the capacity of the Promatik® and DULCODOS® units. This ensures that the percentages of max 40 mg/l SiO_2 of silicate and/or 6.7 mg/l of phosphate PO_4 (5mg/l P_2O_5) are adhered to, as laid down by the "Drinking Water Ordinance".

Function of the systems

In a flow of water, the contact water meter transmits pulses with a fixed pulse interval corresponding to the pulses to the metering pump in line with the flow. Each of these pulses results in a metering stroke of the metering pump, thereby feeding the metering solution. The metering volume per stroke can thus be adjusted continuously between 100 and 50% using the stroke adjustment dial. Because of the very low starting limit and the short pulse interval, a constant volume-proportional addition of chemicals can always be maintained, from minimum water flow rate to maximum load, guaranteeing the best process result.

Promatik® proportional flow dosing system

Consisting of a Beta® metering pump with sound insulation plate, contact water meter, suction assembly with foot valve and 2-phase level switch with pre-warning, acting as a low flow contact and empty signal, injection valve and metering line. In the "R" design of the compact metering unit, the metering pump is fitted on the contact water meter; with the "W" design of split system there are wall brackets for mounting the metering pump. Horizontal fitting position of the contact water meter. DVGW-tested in conjunction with the EXACTAPHOS® metering solution. DVGW No. NW-9101 CM 0179.

DVGW CERT

4.1 Metering System Promatik®

4.1.1 Metering System Promatik®

Protects pipework, fittings, and appliances from corrosion and limescale.

For flows of 5 – 27 m³/h

The proportional metering system Promatik® is used in the potable water sector for the flow-dependent, adjustable metering of liquid media, like the EXACTAPHOS®. It consists of the metering pump Beta®, a contact water meter, a suction assembly with foot valve and level switch and an injection valve and metering line.

In a flow of water, the contact water meter transmits pulses with a fixed pulse interval corresponding to the pulses to the metering pump in line with the flow. Each of these pulses results in a metering stroke of the metering pump, thereby feeding the metering solution. The metering volume per stroke can thus be adjusted continuously between 100 and 50% using the stroke adjustment dial. Because of the very low starting limit and short pulse interval, a constant volume-proportional addition of chemicals can always be maintained from minimum water flow rate to maximum load, thereby guaranteeing the best process result

Your benefits

- DVGW-tested in conjunction with the EXACTAPHOS® metering solution. DVGW No. NW-9101 CM 0179.
- The EXACTAPHOS® metering solutions are matched to the capacity of the ProMatik® metering units.

Technical details

- Consisting of a Beta® metering pump, contact water meter, suction assembly with foot valve and 2-phase level switch with pre-warning as low flow contact and empty signal, injection valve and metering line.
- In the "R" design compact metering system, the metering pump is built onto the contact water meter.
- In the "W" design split system there are wall brackets for accommodating the metering pump. Contact cable and PE metering line 2 m long. Horizontal fitting position of the contact water meter.

Field of application

Potable water treatment

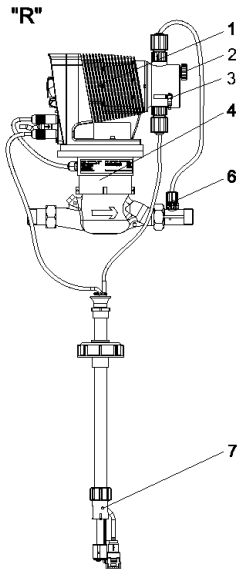

P_NM_0004_SW1

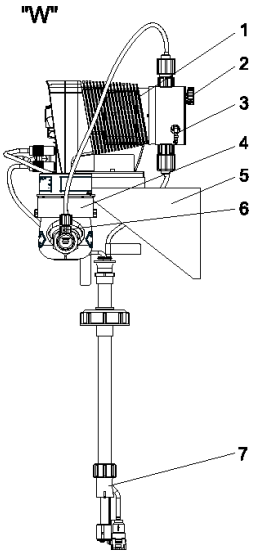

P_NM_0005_SW1

1 Metering pump
2 Bleed valve
3 Bypass hose sleeve
4 Contact water meter
5 Wall bracket
6 Injection valve
7 Suction lance with level switch

Promatik® type		NG 5	NG 10	NG 20	NG 30
Maximum flow Q max.	m³/h	5	11	16	27
Lower working limit	m³/h	0.05	0.08	0.13	0.24
Metering interval approx.	l/stroke	0.7	1.1	1.8	2.8
Feed rate 50-100 %	ml/m³	50 – 165	50 – 165	50 – 165	50 – 165
Operating pressure	bar	1 – 10	1 – 10	1 – 10	1 – 10
Metering pump type		BT4b 1000 PPT2	BT4b 1601 PPT2	BT4b 1602 PPT2	BT4b 1604 PPT2
Meter connecting thread		G 1 B	G 1 1/4 B	G 2 B	G 2 1/2 B
Screw connector width		R 3/4	R 1	R 1 1/2	R 2
Length without thread	mm	190	260	300	270

4.1.2 Metering System Promatik®

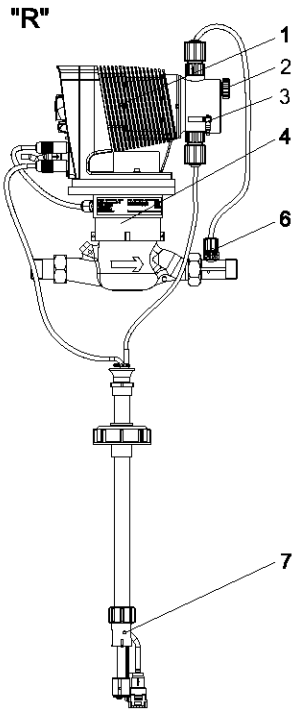

P_NM_0004_SW1

1 Metering pump
2 Bleed valve
3 Bypass hose sleeve
4 Contact water meter
5 Wall bracket
6 Injection valve
7 Suction lance with level switch

	Shipping weight approx. kg	Order no.
NG 5 R compact metering system	6	1036414
NG 5 W split metering system	6	1036415
NG 10 R compact metering system	7	1036416
NG 10 W split metering system	7	1036417
NG 20 R compact metering system	9	1036418
NG 20 W split metering system	9	1036419
NG 30 R compact metering system	11	1038104
NG 30 W split metering system	11	1038105

Materials

Dosing head/valves: Polypropylene (PP)

Metering diaphragm EPDM with PTFE insert

Seals: EPDM

Valve balls: ceramic

Float switches: PP

Suction assembly: flexible PVC

Discharge tube: PE

4.2 Chemicals for Water Treatment

4.2.1 Chemicals

EXACTAPHOS® SP 210

Silicate phosphate liquid metering solution. Drinking water treatment for soft water. Promatik® compact metering system.

	Volume l	Order no.
EXACTAPHOS® SP 210	20	950097
EXACTAPHOS® SP 210	200	950043

EXACTAPHOS® P 612

Phosphate liquid metering solution. Drinking water treatment for medium hard water. Promatik® compact metering system.

	Volume l	Order no.
EXACTAPHOS® P 612	20	950098
EXACTAPHOS® P 612	200	950048

EXACTAPHOS® P 1020

Phosphate liquid metering solution. Drinking water treatment for hard water. Promatik® compact metering system.

	Volume l	Order no.
EXACTAPHOS® P 1020	20	950099
EXACTAPHOS® P 1020	200	950053



ProMinent® Chemical Resistance List

Resistance of Materials Used in Liquid Ends to the Chemicals Most Frequently Used

The data apply to standard conditions (20 °C, 1,013 mbar).

s	=	saturated solution in water
+	=	resistant
+/o	=	largely resistant
o	=	conditionally resistant
-	=	not resistant
n	=	resistance not known
=>	=	see
*	=	For bonded connections, the resistance of the adhesive (e.g. Tangit) is to be considered. (Materials of the types 'o' and '-' are not recommended !)
**	=	does not apply to glass fibre reinforced material

Concentration data are stated in weight percent, referred to aqueous solutions. If percentages are stated for the level of resistance, this level of resistance is only valid up to this concentration.

NOTE:

The elastomers **CSM (Hypalon®)** and I**IR (butyl rubber)** used as diaphragm materials in pulsation dampers have properties similar to **EPDM**.

PTFE is resistant to all chemicals in this list.

PTFE filled with carbon,however, is attacked by strong oxidants such as bromine (anhydrous) or concentrated acids (phosphoric acid, sulphuric acid, chromic acid).

The resistance of PVC-U adhesive joints with Tangit deviates from the list below with regard to the following chemicals:

Medium	Concentration range
Sulfochromic acid	≥ 70 % H_2SO_4+ 5 % $K_2Cr_2O_7$/$Na_2Cr_2O_7$
Chromic acid	≥ 10 % CrO_3
Hydrochloric acid	≥ 25 % HCl
Hydrogen peroxide	≥ 5 % H_2O_2
Hydrofluoric acid	≥ 0 % HF

Explanation of abbreviations used as column headings:

PMMA:	Polymethylmethacrylate (Acrylic) resistance
PVC:	Polyvinylchloride, rigid, (PVC-U) resistance
PP:	Polypropylene resistance
PVDF:	Polyvinylidene fluoride
1.4404:	Stainless steel 1.4404 & 1.4571 resistance
FKM:	Fluorine Rubber (e.g. Viton® A & B) resistance
EPDM:	Ethylene-Propylene-Dien-rubber resistance
PharMed®:	Pharmed® resistance
PE:	Polyethylene resistance
2.4819:	Hastelloy C-276 resistance
WPC:	water endangering class

Viton® is a registered trademark of DuPont Dow Elastomers

Water endangering classes (WGK):

1	=	slightly hazardous to water
2	=	hazardous to water
3	=	severely hazardous to water
(X)	=	No classification. Classification according to conclusion by analogy. To be used under reserve.

Safety data sheets

Safety data sheets on our products in a number of different languages are provided on our website.

www.prominent.com/MSDS

ProMinent® Chemical Resistance List

The data is taken from relevant manufacturer´s documentation and our own tests. Resistance of materials is also dependant on other factors, e.g. operating conditions, conditions of surfaces etc, and so this list must be treated as an initial guide only. It cannot claim to offer any guarantees. It should be taken into consideration in particular that usual dosing media are compounds, and their corrosiveness cannot be deducted simply by adding the corrosiveness of each single component. In such cases the chemical producers' data of the material compatibility are to be considered as a matter of prime importance for the material choice. A safety data sheet does not give this data and therefore cannot take the place of the technical documentation on the application.

Chemical	Formula	Conc	PMMA	PVC	PP	PVDF	1.4404	FKM	EPDM	PharMed®	PE	2.4819	WPC
Acetaldehyde	CH_3CHO	100%	-	-	o	-	+	-	+/o	-	+	+	2
Acetamide	CH_3CONH_2	s	+	+	+	+	+	o	+	+/o	+	+	1
Acetic Acid	CH_3COOH	100%	-	50%	+	+	+	-	o	60%	70%	+	1
Acetic Anhydride	$(CH_3CO)_2O$	100%	-	-	o	-	+	-	+/o	+	o	+	1
Acetic Ether => Ethyl Acetate													
Acetone	CH_3COCH_3	100%	-	-	+	-	+	-	+	-	+	+	1
Acetophenone	$C_6H_5COCH_3$	100%	-	n	+	-	+	-	+	n	+	+	
Acetyl Chloride	CH_3COCl	100%	-	+	n	-	o	+	-	o	n	+	1
Acetylacetone	$CH_3COCH_2COCH_3$	100%	-	-	+	-	+	-	+	n	+	+	1
Acetylene Dichloride => Dichloro Ethylene													
Acetylene Tetrachloride => Tetrachloro Ethane													
Acrylonitril	CH_2=CH-CN	100%	-	-	+	+	+	-	-	-	+	+	3
Adipic Acid	$HOOC(CH_2)_4COOH$	s	+	+	+	+	+	+	+	+/o	+	+	1
Allyl Alcohol	CH_2CHCH_2OH	96%	-	o	+	+	+	-	+	o	+	+/o	2
Aluminium Acetate	$Al(CH_3COO)_3$	s	+	+	+	+	+	+	+	+	+	+/o	1
Aluminium Bromide	$AlBr_3$	s	+	+	+	+	n	+	+	+	+	+	2
Aluminium Chloride	$AlCl_3$	s	+	+	+	+	-	+	+	+	+	+	1
Aluminium Fluoride	AlF_3	10%	+	+	+	+	-	+	+	+	+	+/o	1
Aluminium Hydroxide	$Al(OH)_3$	s	+	+	+	+	+	+	+	+	+	+	1
Aluminium Nitrate	$Al(NO_3)_3$	s	+	+	+	+	+	+	+	+	+	+	1
Aluminium Phosphate	$AlPO_4$	s	+	+	+	+	+	+	+	+	+	+	1
Aluminium Sulphate	$Al_2(SO_4)_3$	s	+	+	+	+	+	+	+	+	+	+	1
Ammonium Acetate	CH_3COONH_4	s	+	+/o	+	+	+	+	+	+	+	+	1
Ammonium Bicarbonate	NH_4HCO_3	s	+	+	+	+	+	+	+	+	+	+	1
Ammonium Carbonate	$(NH_4)_2CO_3$	40%	+	+	+	+	+	+	+	+	+	+	1
Ammonium Chloride	NH_4Cl	s	+	+	+	+	-	+	+	+	+	+/o	1
Ammonium Fluoride	NH_4F	s	+	o	+	+	o	+	+	+	+	+	1
Ammonium Hydroxide	"NH_4OH"	30%	+	+	+	+ (25 °C)	+	-	+	+	+	+	2
Ammonium Nitrate	NH_4NO_3	s	+	+	+	+	+	+	+	+	+	+	1
Ammonium Oxalate	$(COONH_4)_2 * H_2O$	s	+	+	+	+	+	+	+	+	+	+	1
Ammonium Perchlorate	NH_4ClO_4	10%	+	+	+	+	+	+	+	+	+	+	1
Ammonium Peroxodisulphate	$(NH_4)_2S_2O_8$	s	+	+	+	+	5%	+	+	+	+	5%	2
Ammonium Phosphate	$(NH_4)_3PO_4$	s	+	+	+	+	10%	+	+	+	+	10%	1
Ammonium Sulphate	$(NH_4)_2SO_4$	s	+	+	+	+	10%	+	+	+	+	10%	1
Ammonium Sulphide	$(NH_4)_2S$	s	+	+	+	+	n	+	+	n	+	n	2
Ammoniumaluminium Sulphate	$NH_4Al(SO_4)_2$	s	+	+	+	+	+	+	+	+	+	+	1
Amyl Alcohol	$C5H_{11}OH$	100%	+	+	+	+	+	-	+	-	+	+	1
Aniline	$C_6H_5NH_2$	100%	-	-	+	+	+	-	+/o	o	+	+	2
Aniline Hydrochloride	$C_6H_5NH_2 * HCl$	s	n	+	+	+	-	+/o	+/o	o	+	+	2
Antimony Trichloride	$SbCl_3$	s	+	+	+	+	-	+	+	+	+	n	2
Aqua Regia	$3\ HCl + HNO_3$	100%	-	+	-	+	-	-	o	-	-	-	2
Arsenic Acid	H_3AsO_4	s	+	+	+	+	+	+	+	o	+	+	3
Barium Carbonate	$BaCO_3$	s	+	+	+	+	+	+	+	+	+	+	1
Barium Chloride	$BaCl_2$	s	+	+	+	+	-	+	+	+	+	+	1
Barium Hydroxide	$Ba(OH)_2$	s	+	+	+	+	+	+	+	+	+	+	1
Barium Nitrate	$Ba(NO_3)_2$	s	+	+	+	+	+	+	+	+	+	+	1
Barium Sulphate	$BaSO_4$	s	+	+	+	+	+	+	+	+	+	+	1
Barium Sulphide	BaS	s	+	+	+	+	+	+	+	+	+	+	(1)
Benzaldehyde	C_6H_5CHO	100%	-	-	+	-	+	+	+	-	o	+	1
Benzene	C_6H_6	100%	-	-	o	+	+	o	-	-	o	+	3
Benzene Sulphonic Acid	$C_6H_5SO_3H$	10%	n	n	+	+	+	+	-	-	n	+	2
Benzoic Acid	C_6H_5COOH	s	+	+	+	+	+	+	+	+/o	+	+	1
Benzoyl Chloride	C_6H_5COCl	100%	-	n	o	n	o	+	+	n	o	+	2



ProMinent® Chemical Resistance List

Chemical	Formula	Conc	PMMA	PVC	PP	PVDF	1.4404	FKM	EPDM	PharMed®	PE	2.4819	WPC
Benzyl Alcohol	$C_6H_5CH_2OH$	100%	-	-	+	+	+	+	-	+	+	+	1
Benzyl Benzoate	$C_6H_5COOC_7H_7$	100%	-	-	+	o	+	+	-	-	+	+	2
Benzyl Chloride	$C_6H_5CH_2Cl$	90%	-	n	o	+	+	+	-	-	o	+	2
Bitter Salt => Magnesium Sulphate													
Bleach => Sodium Hypochlorite													
Blue Vitriol => Copper Sulphate													
Borax => Sodium Tetraborate													
Boric Acid	H_3BO_3	s	+	+	+	+	+	+	+	+	+	+	1
Brine		s	+	+/o	+	+	+/o	+	+	+	+	+	1
Bromine (dry)	Br_2	100%	-	-	-	+	-	-	-	-	-	+	2
Bromine Water	$Br_2 + H_2O$	s	-	+	-	+	-	-	-	n	-	n	(2)
Bromo Benzene	C_6H_5Br	100%	n	n	o	+	+	o	-	-	o	+	2
Bromochloro Methane	CH_2BrCl	100%	-	-	-	+	+	n	+/o	-	o	+	2
Bromochlorotrifluoro Ethane	$HCClBrCF_3$	100%	-	-	o	+	+	+	-	+	o	+	(3)
Butanediol	HOC_4H_8OH	10%	n	+	+	+	+	o	+	+	+	+	1
Butanetriol	$C_4H_{10}O_3$	s	+	+	+	+	+	o	+	+	+	+	1
Butanol	C_4H_9OH	100%	-	+	+	+	+	o	+/o	-	+	+	1
Butyl Acetate	$C_7H_{13}O_2$	100%	-	-	+	+	+	-	-	+/o	+	+	1
Butyl Acetate	$CH_3COOC_4H_9$	100%	-	-	o	+	+	-	+/o	+/o	-	+	1
Butyl Alcohol => Butanol													
Butyl Amine	$C_4H_9NH_2$	100%	n	n	n	-	+	-	-	n	+	+	1
Butyl Benzoate	$C_6H_5COOC_4H_9$	100%	-	-	o	n	+	+	+	-	o	+	2
Butyl Mercaptane	C_4H_9SH	100%	n	n	n	+	n	+	-	n	n	n	3
Butyl Oleate	$C_{22}H_{42}O_2$	100%	n	n	n	+	+	+	+/o	n	n	+	1
Butyl Stearate	$C_{22}H_{44}O_2$	100%	o	n	n	+	+	+	-	n	n	+	1
Butyraldehyde	C_3H_7CHO	100%	-	n	+	n	+	-	+/o	-	+	+	1
Butyric Acid	C_3H_7COOH	100%	5%	20%	+	+	+	+	+	+/o	+	+	1
Calcium Acetate	$(CH_3COO)_2Ca$	s	+	+	+	+	+	+	+	+	+	+	1
Calcium Bisulphite	$Ca(HSO_3)_2$	s	+	+	+	+	+	+	+	+	+	+	(1)
Calcium Carbonate	$CaCO_3$	s	+	+	+	+	+	+	+	+	+	+	1
Calcium Chloride	$CaCl_2$	s	+	+	+	+	-	+	+	+	+	+	1
Calcium Cyanide	$Ca(CN)_2$	s	+	+	+	+	n	+	+	+	+	n	3
Calcium Hydroxide	$Ca(OH)_2$	s	+	+	+	+	+	+	+	+	+	+	1
Calcium Hypochlorite	$Ca(OCl)_2$	s	+	+	o	+	-	o	+	+	+	+	2
Calcium Nitrate	$Ca(NO_3)_2$	s	+	50%	50%	+	+	+	+	+	+	+	1
Calcium Phosphate	$Ca_3(PO_4)_2$	s	+	+	+	+	+	+	+	+	+	+	1
Calcium Sulphate	$CaSO_4$	s	+	+	+	+	+	+	+	+	+	+	1
Calcium Sulphide	CaS	s	+	+	+	+	n	+	+	+	+	+	(2)
Calcium Sulphite	$CaSO_3$	s	+	+	+	+	+	+	+	+	+	+	(1)
Calcium Thiosulphate	CaS_2O_3	s	+	+	+	+	-	+	+	+	+	+	1
Carbolic Acid => Phenole													
Carbon Disulphide	CS_2	100%	-	-	o	+	+	+	-	-	o	+	2
Carbon Tetrachloride	CCl_4	100%	-	-	-	+	+	+	-	-	o	+	3
Carbonic Acid	"H_2CO_3"	s	+	+	+	+	+	+	+	+	+	+	1
Caustic Potash => Potassium Hydroxide													
Caustic Soda => Sodium Hydroxide													
Chloric Acid	$HClO_3$	20%	+	+	-	+	-	o	o	+	10%	+	2
Chlorinated Lime => Calcium Hypochlorite													
Chlorine Dioxide Solution	$ClO_2 + H_2O$	0.5%	o	+	o	+	-	o	-	-	o	+	
Chlorine Water	$Cl_2 + H_2O$	s	+	+	o	+	-	+	+	-	o	+	
Chloro Benzene	C_6H_5Cl	100%	-	-	+	+	+	+	-	-	o	+	2
Chloro Ethanol	$ClCH_2CH_2OH$	100%	-	-	+	o	+	-	o	+	+	+	3
Chloro Ethylbenzene	$C_6H_4ClC_2H_5$	100%	-	-	o	n	+	o	-	-	o	+	(2)
Chloro Phenole	C_6H_4OHCl	100%	-	n	+	+	+	n	-	-	+	+	2
Chloro Toluene	C_7H_8Cl	100%	-	-	n	+	+	+	-	-	n	+	2
Chloroacetone	$ClCH_2COCH_3$	100%	-	-	n	n	+	-	+	-	n	+	3
Chlorobutadiene	C_4H_5Cl	100%	-	-	n	n	+	+	-	-	n	+	1
Chloroform	$CHCl_3$	100%	-	-	o	+	+	+	-	o	-	+	2
Chlorohydrin	C_3H_5OCl	100%	-	n	+	-	+	+	o	+	+	+	3
Chloroprene => Chlorobutadiene													
Chlorosulphonic Acid	$SO_2(OH)Cl$	100%	-	o	-	+	-	-	-	-	-	o	1
Chrome-alum => Potassium Chrome Sulphate													
Chromic Acid	H_2CrO_4	50%	-	+*	o	+	10%	+	-	o	+	10%	3

ProMinent® Chemical Resistance List

Chemical	Formula	Conc	PMMA	PVC	PP	PVDF	1.4404	FKM	EPDM	PharMed®	PE	2.4819	WPC
Chromic-Sulphuric Acid	K_2CrO_4+ H_2SO_4	s	-	+*	-	+	n	n	n	-	-	n	3
Chromium Sulphate	$Cr_2(SO_4)_3$	s	+	+	+	+	+	+	+	+	+	+	1
Citric Acid	$C_6H_8O_7$	s	+	+	+	+	+	+	+	+	+	+	1
Cobalt Chloride	$CoCl_2$	s	+	+	+	+	-	+	+	+	+	+	2
Copper-II-Acetate	$Cu(CH_3COO)_2$	s	+	+	+	+	+	+	+	+	+	+	3
Copper-II-Arsenite	$Cu_3(AsO_3)_2$	s	+	+	+	+	+	+	+	+	+	+	3
Copper-II-Carbonate	$CuCO_3$	s	+	+	+	+	+	+	+	+	+	+	2
Copper-II-Chloride	$CuCl_2$	s	+	+	+	+	1%	+	+	+	+	+	2
Copper-II-Cyanide	$Cu(CN)_2$	s	+	+	+	+	+	+	+	+	+	+	(3)
Copper-II-Fluoride	CuF_2	s	+	+	+	+	+	+	+	+	+	+	(2)
Copper-II-Nitrate	$Cu(NO_3)_2$	s	+	+	+	+	+	+	+	+	+	+/o	2
Copper-II-Sulphate	$CuSO_4$	s	+	+	+	+	+	+	+	+	+	+	2
Cresols	$C_6H_4CH_3OH$	100%	o	o	+	+	+	+	-	-	+	+	2
Crotonaldehyde	$CH_3C_2H_2CHO$	100%	n	-	+	+	+	-	+	-	+	+	3
Cubic Nitre => Sodium Nitrate													
Cumene => Isopropyl Benzene													
Cyclo Hexane	C_6H_{12}	100%	+	-	+	+	+	+	-	-	+	o	1
Cyclohexanole	$C_6H_{11}OH$	100%	o	+/o	+	+	+	+	-	-	+	+	1
Cyclohexanone	$C_6H_{10}O$	100%	-	-	+	-	+	-	+/o	-	+	+	1
Cyclohexyl Alcohol => Cyclohexanol													
Cyclohexylamine	$C_6H_{11}NH_2$	100%	n	n	n	n	+	-	n	n	n	+	2
Decahydronaphthaline	$C_{10}H_{18}$	100%	-	+/o	o	+	n	o	-	-	o	+	2
Decaline => Decahydronaphthalene													
Dextrose => Glucose													
Diacetonalcohol	$C_6H_{12}O_2$	100%	-	-	+	o	+	-	+	-	+	+	1
Dibromoethane	$C_2H_4Br_2$	100%	-	-	n	+	+	+	-	-	-	+	3
Dibutyl Ether	$C_4H_9OC_4H_9$	100%	-	-	+	+	+	-	o	-	+	+	2
Dibutyl Phthalate	$C_{16}H_{22}O_4$	100%	-	-	+	+	+	+	+/o	+	o	+	2
Dibutylamine	$(C_4H_9)_2NH$	100%	n	n	+	+	+	-	-	n	+	+	1
Dichloro Acetic Acid	$Cl_2CHCOOH$	100%	-	+	+	+	+	-	+	o	+	+	1
Dichloro Benzene	$C_6H_4Cl_2$	100%	-	-	o	+	+	+	-	-	o	+	2
Dichloro Butan	$C_4H_8Cl_2$	100%	-	-	o	+	+	+	-	-	o	+	3
Dichloro Butene	$C_4H_6Cl_2$	100%	-	-	o	+	+	o	-	-	o	+	3
Dichloro Ethane	$C_2H_4Cl_2$	100%	-	-	o	+	+	+	-	o	-	+	3
Dichloro Ethylene	$C_2H_2Cl_2$	100%	-	-	o	+	+	o	-	o	-	+	2
Dichloro Methane	CH_2Cl_2	100%	-	-	o	o	o	+	-	o	-	+	2
Dichloroisopropyl Ether	$(C_3H_6Cl)_2O$	100%	-	-	o	n	+	o	o	-	o	+	(2)
Dicyclohexylamine	$(C_6H_{12})_2NH$	100%	-	-	o	n	+	-	-	-	o	+	2
Diethyleneglycol	$C_4H_{10}O_3$	s	+	+	+	+	+	+	+	+	+	+	1
Diethyleneglycolethyl Ether	$C_8H_{18}O_3$	100%	n	n	+	+	+	n	+/o	o	+	+	1
Diethylether	$C_2H_5OC_2H_5$	100%	-	-	o	+	+	-	-	o	o	+	1
Diglycolic Acid	$C_4H_6O_5$	30%	+	+	+	+	+	+	n	+/o	+	+	3
Dihexyl Phthalate	$C_{20}H_{26}O_4$	100%	-	-	+	+	+	-	n	+	+	+	(1)
Diisobutylketone	$C_9H_{18}O$	100%	-	-	+	+	+	-	+	-	+	+	1
Di-iso-nonyl Phthalate	$C_{26}H_{42}O_4$	100%	-	-	+	+	+	n	n	+	+	+	1
Diisopropylketone	$C_7H_{14}O$	100%	-	-	+	+	+	-	+	-	+	+	1
Dimethyl Carbonate	$(CH_3O)_2CO$	100%	n	n	+	+	+	+	-	n	+	+	1
Dimethyl Ketone => Acetone													
Dimethyl Phthalate	$C_{10}H_{10}O_4$	100%	-	-	+	+	+	-	+/o	+	+	+	1
Dimethylformamide	$HCON(CH_3)_2$	100%	-	-	+	-	+	-	+	+/o	+	+	1
Dimethylhydrazine	$H_2NN(CH_3)_2$	100%	n	n	+	n	+	-	+	n	+	+	3
Dioctyl Phthalate	$C_4H_4(COOC_8H_{17})_2$	100%	-	-	+	+	+	-	+/o	+	+	+	1
Dioxane	$C_4H_8O_2$	100%	-	-	o	-	+	-	+/o	-	+	+	1
Disodium Hydrogenphosphate	Na_2HPO_4	s	+	+	+	+	+	+	+	+	+	+	1
Disulfur Acid -- Oleum													
Disulphur Dichloride	S_2Cl_2	100%	n	n	n	+	n	+	-	-	n	n	
DMF => Dimethylformamide													
Engine Oils		100 %	n	+/o	+	+	+	+	-	-	+	+	2
Epsom salts => Magnesium Sulphate													
Ethanol	C_2H_5OH	100%	-	+	+	+	+	-	+	+	+	+	1
Ethanol Amine	$HOC_2H_4NH_2$	100%	o	n	+	-	+	-	+/o	o	+	+	1
Ethyl Acetate	$CH_3COOC_2H_5$	100%	-	-	35%	+	+	-	+/o	+/o	+	+	1
Ethyl Acrylate	$C_2H_3COOC_2H_5$	100%	-	-	+	o	+	-	+/o	-	+	+	2

ProMinent® Chemical Resistance List

Chemical	Formula	Conc	PMMA	PVC	PP	PVDF	1.4404	FKM	EPDM	PharMed®	PE	2.4819	WPC
Ethyl Benzene	C_6H_5-C_2H_5	100%	-	-	o	+	+	o	-	-	o	+	1
Ethyl Benzoate	$C_6H_5COOC_2H_5$	100%	n	-	+	o	+	+	-	-	+	+	1
Ethyl Bromide	C_2H_5Br	100%	-	n	+	+	n	+	-	o	+	+	2
Ethyl Chloroacetate	$ClCH_2COOC_2H_5$	100%	-	o	+	+	+	+	-	-	+	+	2
Ethyl Chlorocarbonate	$ClCO_2C_2H_5$	100%	n	n	n	n	n	+	-	n	n	n	(2)
Ethyl Cyclopentane	$C5H_4C_2H_5$	100%	+	+	+	+	+	+	-	-	+	+	(1)
Ethylacetoacetate	$C_6H_{10}O_3$	100%	n	-	+	+	+	-	+/o	+/o	+	+	1
Ethylacrylic Acid	C_4H_7COOH	100%	n	n	+	+	+	n	+/o	n	+	+	(1)
Ethylene Diamine	$(CH_2NH_2)_2$	100%	o	o	+	-	o	-	+	n	+	o	2
Ethylene Dibromide => Dibromoethane													
Ethylene Dichloride => Dichloro Ethane													
Ethylene Glycol => Glycol													
Ethylenglycol Ethylether	$HOC_2H_4OC_2H_5$	100%	n	n	+	+	+	n	+/o	o	+	+	1
Ethylhexanol	$C_8H_{16}O$	100%	n	+/o	+	+	+	+	+	-	+	+	2
Fatty Acids	R-COOH	100%	+	+	+	+	+	+	o	o	+	+	1
Ferric Chloride	$FeCl_3$	s	+	+	+	+	-	+	+	+	+	+/o	1
Ferric Nitrate	$Fe(NO_3)_3$	s	+	+	+	+	+	+	+	+	+	+	1
Ferric Phosphate	$FePO_4$	s	+	+	+	+	+	+	+	+	+	+	1
Ferric Sulphate	$Fe_2(SO_4)_3$	s	+	+	+	+	o	+	+	+	+	+	1
Ferrous Chloride	$FeCl_2$	s	+	+	+	+	-	+	+	+	+	+/o	1
Ferrous Sulphate	$FeSO_4$	s	+	+	+	+	+	+	+	+	+	+	1
Fixing Salt => Sodium Thiosulphate													
Fluoro Benzene	C_6H_5F	100%	-	-	+	+	+	o	-	-	o	+	2
Fluoroboric Acid	HBF_4	35%	+	+	+	+	o	+	+	-	+	+	1
Fluorosilicic Acid	H_2SiF_6	100%	+	30%	30%	+	o	+	+	o	40%	+/o	2
Formaldehyde	CH_2O	40%	+	+	+	+	+	-	+/o	-	+	+	2
Formalin => Formaldehyde													
Formamide	$HCONH_2$	100%	+	-	+	+	+	+	+	n	+	+	1
Formic Acid	HCOOH	s	-	+/o	+	+	+	-	-	+/o	+	+	1
Furane	C_4H_4O	100%	-	-	+	-	+	-	n	-	+	+	3
Furane Aldehyde	$C_5H_5O_2$	100%	n	n	n	o	+	-	+/o	-	n	n	2
Furfuryl Alcohol	$OC_4H_3CH_2OH$	100%	-	-	+	o	+	n	+/o	-	+	+	1
Gallic Acid	$C_6H_2(OH)_3COOH$	5%	+	+	+	+	+	+	+/o	+	+	+	1
Gasoline		100 %	-	-	+	+	+	+	-	-	+	+	2
Glauber´s Salt => Sodium Sulphate													
Glucose	$C_6H_{12}O_6$	s	+	+	+	+	+	+	+	+	+	+	1
Glycerol	$C_3H_5(OH)_3$	100%	+	+	+	+	+	+	+	+	+	+	1
Glycerol Triacetate	$C_3H_5(CH_3COO)_3$	100%	n	n	+	+	+	-	+	n	+	+	1
Glycine	NH_2CH_2COOH	10%	+	+	+	+	+	+	+	+	+	+	1
Glycol	$C_2H_4(OH)_2$	100%	+	+	+	+	+	+	+	+	+	+	1
Glycolic Acid	$CH_2OHCOOH$	70%	+	37%	+	+	+	+	+	+/o	+	+	1
Gypsum => Calcium Sulphate													
Heptane	C_7H_{16}	100%	+	+	+	+	+	+	-	-	+	+	1
Hexachloroplatinic Acid	H_2PtCl_6	s	n	+	+	+	-	n	+	n	+	-	
Hexanal	$C_5H_{11}CHO$	100%	n	n	+	+	+	-	+/o	-	+	+	1
Hexane	C_6H_{14}	100%	+	+	+	+	+	+	-	-	+	+	1
Hexanol	$C_6H_{13}OH$	100%	-	-	+	+	+	n	+	o	+	+	1
Hexantriol	$C_6H_9(OH)_3$	100%	n	n	+	+	+	+	+	n	+	+	1
Hexene	C_6H_{12}	100%	n	+	+	+	+	+	-	-	+	+	1
Hydrazine Hydrate	N_2H_4 * H_2O	s	+	+	+	+	+	n	+	o	+	+	3
Hydrobromic Acid	HBr	50%	+	+	+	+	-	-	+	-	+	o	1
Hydrochloric Acid	HCl	38%	32%	+ *	+	+	-	+	o	o	+	o	1
Hydrofluoric Acid	HF	80%	-	40% *	40% **	+	-	+	o	-	40%	+/o	1
Hydrogen Cyanide	HCN	s	+	+	+	+	+	+	+	+	+	+	3
Hydrogen Peroxide	H_2O_2	90%	40%	40%*	30%	+	+	30%	30%	+	+	+	1
Hydroiodic Acid	HI	s	+	+	+	+	-	-	n	-	+	n	1
Hydroquinone	$C_6H_4(OH)_2$	s	o	+	+	+	+	+	-	+/o	+	+	2
Hydroxylamine Sulphate	$(NH_2OH)_2$ * H_2SO_4	10%	+	+	+	+	+	+	+	+	+	+	2
Hypochlorous Acid	HOCl	s	+	+	o	+	-	+	+/o	+	o	+	(1)
Iodine	I_2	s	o	-	+	+	-	+	+/o	+	o	+/o	
Iron Vitriol => Ferrous Sulphate													
Isobutanol => Isobutyl Alcohol													
Isobutyl Alcohol	$C_2H_5CH(OH)CH_3$	100%	-	+	+	+	+	+	+	o	+	+	1

ProMinent® Chemical Resistance List

Chemical	Formula	Conc	PMMA	PVC	PP	PVDF	1.4404	FKM	EPDM	PharMed®	PE	2.4819	WPC
Isopropanol => Isopropyl Alcohol													
Isopropyl Acetate	$CH_3COOCH(CH_3)_2$	100%	-	-	+	+	+	-	+/o	+/o	+	+	1
Isopropyl Alcohol	$(CH_3)_2CHOH$	100%	-	+/o	+	+	+	+	+	o	+	+	1
Isopropyl Benzene	$C_6H_5CH(CH_3)_2$	100%	-	-	o	+	+	+	-	-	o	+	1
Isopropyl Chloride	$CH_3CHClCH_3$	80%	-	-	o	+	+	+	-	o	o	+/o	2
Isopropyl Ether	$C_6H_{14}O$	100%	-	-	o	+	+	-	-	o	o	+	1
Kitchen Salt => Sodium Chloride													
Lactic Acid	$C_3H_6O_3$	100%	-	+	+	+	+/o	+	10%	+/o	+	+	1
Lead Acetate	$Pb(CH_3COO)_2$	s	+	+	+	+	+	+	+	+	+	+	2
Lead Nitrate	$Pb(NO_3)_2$	50%	+	+	+	+	+	+	+	+	+	+	2
Lead Sugar => Lead Acetate													
Lead Sulphate	$PbSO_4$	s	+	+	+	+	+	+	+	+	+	+	(2)
Lead Tetraethyl	$Pb(C_2H_5)_4$	100%	+	+	+	+	+	+	-	n	+	+	3
Lime Milk => Calcium Hydroxide													
Liquid Ammonia => Ammonium Hydroxide													
Lithium Bromide	LiBr	s	+	+	+	+	+	+	+	+	+	+	1
Lithium Chloride	LiCl	s	+	+	+	+	-	+	+	+	+	n	1
Lunar Caustic => Silver Nitrate													
Magnesium Carbonate	$MgCO_3$	s	+	+	+	+	+	+	+	+	+	+/o	1
Magnesium Chloride	$MgCl_2$	s	+	+	+	+	o	+	+	+	+	+	1
Magnesium Hydroxide	$Mg(OH)_2$	s	+	+	+	+	+	+	+	+	+	+	1
Magnesium Nitrate	$Mg(NO_3)_2$	s	+	+	+	+	+	+	+	+	+	+	1
Magnesium Sulphate	$MgSO_4$	s	+	+	+	+	+	+	+	+	+	+/o	1
Maleic Acid	$C_4H_4O_4$	s	+	+	+	+	+	+	+	o	+	+	1
Malic Acid	$C_4H_6O_5$	s	+	+	+	+	+	+	+	+	+	+	1
Manganese-II-Chloride	$MnCl_2$	s	+	+	+	+	-	+	+	+	+	+	1
Manganese-II-Sulphate	$MnSO_4$	s	+	+	+	+	+	+	+	+	+	+	1
MEK => Methyl Ethyl Ketone													
Mercury	Hg	100%	+	+	+	+	+	+	+	+	+	+	3
Mercury-II-Chloride	$HgCl_2$	s	+	+	+	+	-	+	+	+	+	+	3
Mercury-II-Cyanide	$Hg(CN)_2$	s	+	+	+	+	+	+	+	+	+	+	3
Mercury-II-Nitrate	$Hg(NO_3)_2$	s	+	+	+	+	+	+	+	+	+	+	3
Mesityl Oxide	$C_6H_{10}O$	100%	-	-	n	n	+	-	+/o	-	n	+	1
Methacrylic Acid	C_3H_5COOH	100%	n	n	+	+	+	o	+/o	+/o	+	+	1
Methanol	CH_3OH	100%	-	-	+	+	+	o	+	+/o	+	+	1
Methoxybutanol	$CH_3O(CH_2)_4OH$	100%	-	-	+	+	+	+	o	o	+	+	(1)
Methyl Acetate	CH_3COOCH_3	60%	-	-	+	+	+	-	+/o	+/o	+	+	2
Methyl Acrylate	$C_2H_3COOCH_3$	100%	-	-	+	+	+	-	+/o	o	+	+	2
Methyl Benzoate	$C_6H_5COOCH_3$	100%	-	-	+	o	+	+	-	-	+	+	2
Methyl Catechol	$C_6H_3(OH)_2CH_3$	s	+	+	+	+	+	+	-	+o	+	+	(1)
Methyl Cellulose		s	+	+	+	+	+	+	+	+	+	+	1
Methyl Chloroacetate	$ClCH_2COOCH_3$	100%	-	o	+	+	+	o	-	-	+	+	2
Methyl Cyclopentane	$C_5H_9CH_3$	100%	+	+	+	+	+	+	-	-	+	+	(1)
Methyl Dichloroacetate	$Cl_2CHCOOCH_3$	100%	-	-	+	n	+	-	n	-	+	+	2
Methyl Ethyl Ketone	$CH_3COC_2H_5$	100%	-	-	+	-	+	-	+	-	+	+	1
Methyl Glycol	$C_3H_8O_2$	100%	+	+	+	+	+	-	+/o	+	+	+	1
Methyl Isobutyl Ketone	$CH_3COC_4H_9$	100%	-	-	+	-	+	-	o	-	+	+	1
Methyl Isopropyl Ketone	$CH_3COC_3H_7$	100%	-	-	+	-	+	-	+/o	-	+	+	1
Methyl Methacrylate	$C_3H_5COOCH_3$	100%	-	-	+	+	+	-	-	-	+	+	1
Methyl Oleate	$C_{17}H_{33}COOCH_3$	100%	n	n	+	+	+	+	+/o	n	+	+	1
Methyl Salicylate	$HOC_6H_4COOCH_3$	100%	-	-	+	+	+	n	+/o	-	+	+	1
Methylacetyl Acetate	$C_5H_8O_3$	100%	-	-	+	+	+	-	+/o	o	+	+	2
Methylamine	CH_3NH_2	32%	+	o	+	o	+	-	+	+	+	+	2
Methylene Chloride => Dichloro Methane													
Mirabilit => Sodium Sulphate													
Morpholine	C_4H_9ON	100%	-	-	+	-	+	n	n	-	+	+	2
Muriatic Acid => Hydrochloric Acid													
Natron => Sodium Bicarbonate													
Nickel-II-Acetate	$(CH_3COO)_2Ni$	s	+	+	+	+	+	-	+	+	+	+	(2)
Nickel-II-Chloride	$NiCl_2$	s	+	+	+	+	-	+	+	+	+	+	2
Nickel-II-Nitrate	$Ni(NO_3)_2$	s	+	+	+	+	+	+	+	+	+	+/o	2
Nickel-II-Sulphate	$NiSO_4$	s	+	+	+	+	+	+	+	+	+	+/o	2
Nitrate of Lime => Calcium Nitrate													



ProMinent® Chemical Resistance List

Chemical	Formula	Conc	PMMA	PVC	PP	PVDF	1.4404	FKM	EPDM	PharMed®	PE	2.4819	WPC
Nitric Acid	HNO_3	99%	10%	10%*	50%	65%	50%	65%	10%	35%	50%	65%	1
Nitro Methane	CH_3NO_2	100%	-	-	+	o	+	-	+/o	-	+	+	2
Nitro Propane	$(CH_3)_2CHNO_2$	100%	-	-	+	n	+	-	+/o	-	+	+	2
Nitro Toluene	$C_6H_4NO_2CH_3$	100%	-	-	+	+	+	o	-	-	+	+	2
Octane	C_8H_{18}	100%	o	+	+	+	+	+	-	-	+	+	1
Octanol	$C_8H_{17}OH$	100%	-	-	+	+	+	+	+	-	+	+	1
Octyl Cresol	$C_15H_{24}O$	100%	-	-	+	+	+	o	n	-	+	+	(1)
Oil => Engine Oils													
Oleum	$H_2SO_4 + SO_3$	s	n	-	-	-	+	+	-	+	-	+	2
Orthophosphoric Acid => Phosphoric Acid													
Oxalic Acid	$(COOH)_2$	s	+	+	+	+	10%	+	+	+/o	+	+/o	1
Pentane	C_5H_{12}	100%	+	+	+	+	+	+	-	-	+	+	1
Pentanol => Amyl Alcohol													
Perchloric Acid	$HClO_4$	70%	n	10%	10%	+	-	+	+/o	+	+	n	1
Perchloroethylene => Tetrachloro Ethylene													
Perhydrol => Hydrogen Peroxide													
Petroleum Ether	CnH_{2n+2}	100%	+	+/o	+	+	+	+	-	-	+	+	1
Phenole	C_6H_5OH	100%	-	-	+	+	+	+	-	+	+	+	2
Phenyl Ethyl Ether	$C_6H_5OC_2H_5$	100%	-	-	+	n	+	-	-	-	+	+	2
Phenyl Hydrazine	$C_6H5NHNH_2$	100%	-	-	o	+	+	o	-	-	o	+	2
Phosphoric Acid	H_3PO_4	85%	50%	+	+	+	+	+	+	+	+	+	1
Phosphorous Oxychloride	$POCl_3$	100%	-	-	+	+	n	+	+	n	+	+	1
Phosphorous Trichloride	PCl_3	100%	-	-	+	+	+	o	+	+/o	+	+	1
Phthalic Acid	$C_6H_4(COOH)_2$	s	+	+	+	+	+	+	+	+	+	+	1
Picric Acid	$C_6H_2(NO_3)_3OH$	s	+	+	+	+	+	+	+	-	+	+	2
Piperidine	$C_5H_{11}N$	100%	-	-	n	n	+	-	-	-	n	+	2
Potash Alum => Potassium Aluminium Sulphate													
Potassium Acetate	CH_3COOK	s	+	+	+	+	+	+	+	+	+	+	1
Potassium Aluminium Sulphate	$KAl(SO_4)_2$	s	+	+	+	+	+	+	+	+	+	+	1
Potassium Bicarbonate	$KHCO_3$	40%	+	+	+	+	+	+	+	+	+	+/o	1
Potassium Bifluoride	KHF_2	s	n	+	+	+	+	+	+	+	+	+	1
Potassium Bisulphate	$KHSO_4$	5%	+	+	+	+	+	+	+	+	+	+	1
Potassium Bitartrate	$KC_4H_5O_6$	s	+	+	+	+	+	+	+	+	+	+	1
Potassium Borate	KBO_2	s	+	+	+	+	+	+	+	+	+	+	(1)
Potassium Bromate	$KBrO_3$	s	+	+	+	+	+	+	+	+	+	+	2
Potassium Bromide	KBr	s	+	+	+	+	10%	+	+	+	+	0,1	1
Potassium Carbonate	K_2CO_3	s	+	+	+	+	+	+	+	55%	+	+	1
Potassium Chlorate	$KClO_3$	s	+	+	+	+	+	+	+	+	+	+	2
Potassium Chloride	KCl	s	+	+	+	+	-	+	+	+	+	+/o	1
Potassium Chromate	K_2CrO_4	10%	+	+	+	+	+	+	+	+	+	+	3
Potassium Chrome Sulphate	$KCr(SO_4)_2$	s	+	+	+	+	+	+	+	+	+	+	1
Potassium Cyanate	KOCN	s	+	+	+	+	+	+	+	+	+	+	2
Potassium Cyanide	KCN	s	+	+	+	+	5%	+	+	+	+	5%	3
Potassium Cyanoferrate II	$K_4Fe(CN)_6$	s	+	+	+	+	+	+	+	+	+	+	1
Potassium Cyanoferrate III	$K_3Fe(CN)_6$	s	+	+	+	+	+	+	+	+	+	+	1
Potassium Dichromate	$K_2Cr_2O_7$	s	+	+	+	+	25%	+	+	+	+	10%	3
Potassium Fluoride	KF	s	+	+	+	+	+	+	+	+	+	+	1
Potassium Hydroxyde	KOH	50%	+	+	+	+ (25 °C)	+	-	+	10%	+	+	1
Potassium Iodide	KI	s	+	+	+	+	+	+	+	+	+	+	1
Potassium Nitrate	KNO_3	s	+	+	+	+	+	+	+	+	+	+	1
Potassium Perchlorate	$KClO_4$	s	+	+	+	+	n	+	+	+	+	+	1
Potassium Permanganate	$KMnO_4$	s	+	+	+	+	+	+	+	6%	+	+	2
Potassium Persulphate	$K_2S_2O_8$	s	+	+	+	+	+	+	+	+	+	+	1
Potassium Phosphate	KH_2PO_4	s	+	+	+	+	+	+	+	+	+	+	1
Potassium Pyrochromate => Potassium Dichromate													
Potassium Sulphate	K_2SO_4	s	+	+	+	+	+	+	+	+	+	+	1
Potassium Sulphite	K_2SO_3	s	+	+	+	+	+	+	+	+	+	+	1
Propionic Acid	C_2H_5COOH	100%	o	+	+	+	+	+	+	+/o	+	+	1
Propionitrile	CH_3CH_2CN	100%	n	n	+	+	+	+	-	-	+	+	2
Propyl Acetate	$CH_3COOC_3H_7$	100%	-	-	+	+	+	-	+/o	-	+	+	1
Propylene Glycol	$CH_3CHOHCH_2OH$	100%	+	+	+	+	+	+	+	+	+	+	1
Prussic Acid => Hydrogen Cyanide													
Pyridine	C_5H_5N	100%	-	-	o	-	+	-	-	o	+	+	2

ProMinent® Chemical Resistance List

Chemical	Formula	Conc	PMMA	PVC	PP	PVDF	1.4404	FKM	EPDM	PharMed®	PE	2.4819	WPC
Pyrrole	C_4H_4NH	100%	n	n	+	n	+	-	-	-	+	+	2
Roman Vitriol => Copper Sulphate													
Salicylic Acid	HOC_6H_4COOH	s	+	+	+	+	+	+	+	+	+	+/o	1
Salmiac => Ammonium Chloride													
Saltpeter => Potassium Nitrate													
Silic Acid	$SiO_2 * x H_2O$	s	+	+	+	+	+	+	+	+	+	+	1
Silver Bromide	AgBr	s	+	+	+	+	+/o	+	+	+	+	+	1
Silver Chloride	AgCl	s	+	+	+	+	-	+	+	+	+	+/o	1
Silver Nitrate	$AgNO_3$	s	+	+	+	+	+	+	+	+	+	+/o	3
Slaked Lime => Calcium Hydroxide													
Soda => Sodium Carbonate													
Sodium Acetate	$NaCH_3COO$	s	+	+	+	+	+	+	+	+	+	+	1
Sodium Benzoate	C_6H_5COONa	s	+	+	+	+	+	+	+	+	+	+	1
Sodium Bicarbonate	$NaHCO_3$	s	+	+	+	+	+	+	+	+	+	+	1
Sodium Bisulphate	$NaHSO_4$	s	+	+	+	+	+	+	+	+	+	+	1
Sodium Bisulphite	$NaHSO_3$	s	+	+	+	+	+	+	+	+	+	+	1
Sodium Borate	$NaBO_2$	s	+	+	+	+	+	+	+	+	+	+	1
Sodium Bromate	$NaBrO_3$	s	+	+	+	+	+	+	+	+	+	+	3
Sodium Bromide	NaBr	s	+	+	+	+	+	+	+	+	+	+	1
Sodium Carbonate	Na_2CO_3	s	+	+	+	+	+/o	+	+	+	+	+	1
Sodium Chlorate	$NaClO_3$	s	+	+	+	+	+	+	+	+	+	+	2
Sodium Chloride	NaCl	s	+	+	+	+	-	+	+	+	+	+	1
Sodium Chlorite	$NaClO_2$	24%	+	+	+	+	10%	+	+	+	+	10%	2
Sodium Chromate	Na_2CrO_4	s	+	+	+	+	+	+	+	+	+	+	3
Sodium Cyanide	NaCN	s	+	+	+	+	+	+	+	+	+	+	3
Sodium Dichromate	$Na_2Cr_2O_7$	s	+	+	+	+	+	+	+	+	+	+	3
Sodium Dithionite	$Na_2S_2O_4$	s	+	10%	10%	+	+	n	n	+	10%	+/o	1
Sodium Fluoride	NaF	s	+	+	+	+	10%	+	+	+	+	+	1
Sodium Hydrogen Sulphate => Sodium Bisulphate													
Sodium Hydroxide	NaOH	50%	+	+	+	+ (60%/ 25 °C)	+	-	+	30%	+	+	1
Sodium Hypochlorite	NaOCl + NaCl	12%	+	+	o	+	-	+	+	+	o	> 10%	2
Sodium Iodide	NaI	s	+	+	+	+	+	+	+	+	+	+	1
Sodium Metaphosphate	$(NaPO_3)_n$	s	+	+	+	+	+	+	+	+	+	+	1
Sodium Nitrate	$NaNO_3$	s	+	+	+	+	+	+	+	+	+	+	1
Sodium Nitrite	$NaNO_2$	s	+	+	+	+	+	+	+	+	+	+	2
Sodium Oxalate	$Na_2C_2O_4$	s	+	+	+	+	+	+	+	+	+	+	1
Sodium Perborate	$NaBO_2*H_2O_2$	s	+	+/o	+	+	+	+	+	+	+	+/o	1
Sodium Perchlorate	$NaClO_4$	s	+	+	+	+	10%	+	+	+	+	10%	1
Sodium Peroxide	Na_2O_2	s	+	+	+	+	+	+	+	n	-	+	1
Sodium Persulphate	$Na_2S_2O_8$	s	n	+	+	+	+	+	+	+	+	+	1
Sodium Pyrosulphite	$Na_2S_2O_5$	s	+	+	+	+	+	n	n	+	+	+	1
Sodium Salicylate	$C_6H_4(OH)COONa$	s	+	+/o	+	+	+	+	+	+	+	+	1
Sodium Silicate	Na_2SiO_3	s	+	+	+	+	+	+	+	+	+	+	1
Sodium Sulphate	Na_2SO_4	s	+	+	+	+	+	+	+	+	+	+	1
Sodium Sulphide	Na_2S	s	+	+	+	+	+	+	+	+	+	+	2
Sodium Sulphite	Na_2SO_3	s	+	+	+	+	50%	+	+	+	+	50%	1
Sodium Tetraborate	$Na_2B_4O_7 * 10 H_2O$	s	+	+	+	+	+	+	+	+	+	+	1
Sodium Thiosulphate	$Na_2S_2O_3$	s	+	+	+	+	25%	+	+	+	+	25%	1
Sodium Tripolyphosphate	$Na_5P_3O_{10}$	s	+	+	+	+	+	+/o	+	+	+	+	1
Starch	$(C_6H_{10}O_5)_n$	s	+	+	+	+	+	+	n	+	+	+	1
Starch Gum		s	+	+	+	+	+	+	+	+	+	+	1
Styrene	$C_6H_5CHCH_2$	100%	-	-	o	+	+	o	-	-	o	+	2
Sublimate => Mercury-II-Chloride													
Succinic Acid	$C_4H_6O_4$	s	+	+	+	+	+	+	+	+	+	+	1
Sugar Syrup		s	+	+	+	+	+	+	+	+	+	+	1
Sulphur Chloride => Disulphur Dichloride													
Sulphuric Acid	H_2SO_4	98%	30%	50%	85%	+	20%	+	+	30%	80%	+	1
Sulphuric Acid, fuming --> Oleum													
Sulphurous Acid	H_2SO_3	s	+	+	+	+	10%	+	+	+	+	+	(1)
Sulphuryl Chloride	SO_2Cl_2	100%	-	-	-	o	n	+	o	-	-	n	1
Tannic Acid	$C_{76}H_{52}O_{46}$	50%	+	+	+	+	+	+	+	+	+	+	1
Tartaric Acid	$C_4H_6O_6$	s	50%	+	+	+	+	+	+/o	+	+	+	1

ProMinent® Chemical Resistance List

Chemical	Formula	Conc	PMMA	PVC	PP	PVDF	1.4404	FKM	EPDM	PharMed®	PE	2.4819	WPC
Tetrachloro Ethane	$C_2H_2Cl_4$	100%	-	-	o	+	+	o	-	o	o	+	3
Tetrachloro Ethylene	C_2Cl_4	100%	-	-	o	+	+	o	-	o	o	+	3
Tetrachloromethane => Carbon Tetrachloride													
Tetrahydro Furane	C_4H_8O	100%	-	-	o	-	+	-	-	-	o	+	1
Tetrahydro Naphthalene	$C_{10}H_{12}$	100%	-	-	-	+	+	+	-	-	o	+	3
Tetralin => Tetrahydro Naphthalene													
THF => Tetrahydrofurane													
Thionyl Chloride	$SOCl_2$	100%	-	-	-	+	n	+	+	+	-	n	1
Thiophene	C_4H_4S	100%	n	-	o	n	+	-	-	-	o	+	3
Tin-II-Chloride	$SnCl_2$	s	+	o	+	+	-	+	+	+	+	+/o	1
Tin-II-Sulphate	$SnSO_4$	s	n	+	+	+	+	+	+	+	+	+/o	(1)
Tin-IV-Chloride	$SnCl_4$	s	n	+	+	+	-	+	+	+	+	+	1
Titanium Tetrachloride	$TiCl_4$	100%	n	n	n	+	n	o	-	n	n	n	1
Toluene	$C_6H_5CH_3$	100%	-	-	o	+	+	o	-	-	o	+	2
Toluene Diisocyanate	$C_7H_3(NCO)_2$	100%	n	n	+	+	+	-	+/o	n	+	+	2
Tributyl Phosphate	$(C_4H_9)_3PO_4$	100%	n	-	+	+	+	-	+	+	+	+	1
Trichloro Ethane	CCl_3CH_3	100%	-	-	o	+	+	+	-	o	o	+	3
Trichloro Ethylene	C_2HCl_3	100%	-	-	o	+	+/o	o	-	o	o	+	3
Trichloro Methane => Chloroform													
Trichloroacetaldehyde Hydrate	$CCl_3CH(OH)_2$	s	-	-	o	-	+	o	o	n	+	+	2
Trichloroacetic Acid	CCl_3COOH	50%	-	+	+	+	-	-	o	+/o	+	+	1
Tricresyl Phosphate	$(C_7H_7)_3PO_4$	90%	-	-	+	n	+	o	+	+	+	+	2
Triethanol Amine	$N(C_2H_4OH)_3$	100%	+	o	+	n	+	-	+/o	o	+	+	1
Trilene => Trichloro Ethane													
Trioctyl Phosphate	$(C_8H_{17})_3PO_4$	100%	n	-	+	+	+	o	+	+	+	+	2
Trisodium Phosphate	Na_3PO_4	s	+	+	+	+	+	+	+	+	+	+	1
Urea	$CO(NH_2)_2$	s	+	+/o	+	+	+	+	+	20%	+	+	1
Vinyl Acetate	$CH_2=CHOOCCH_3$	100%	-	-	+	+	+	n	n	+/o	+	+	2
Water Glass => Sodium Silicate													
Xylene	$C_6H_4(CH_3)_2$	100%	-	-	-	+	+	o	-	-	o	+	2
Zinc Acetate	$(CH_3COO)_2Zn$	s	+	+	+	+	+	-	+	+	+	+	1
Zinc Chloride	$ZnCl_2$	s	+	+	+	+	-	+	+	+	+	n	1
Zinc Sulphate	$ZnSO_4$	s	+	+	+	+	+	+	+	+	+	+/o	1

ProMinent® Chemical Resistance List

Overview of the Resistance of Soft PVC Hoses (Guttasyn®) to the Most Common Chemicals

This data applies to standard conditions (20 °C, 1013 mbar).

+	=	resistant
o	=	conditionally resistant
-	=	not resistant

The data is taken from relevant manufacturers' literature and supplemented by our own tests and experience. As the resistance of a material also depends on other factors, especially pressure and operating conditions etc, this list should merely be regarded as an initial guide and does not claim to offer any guarantees. Take into consideration the fact that conventional dosing agents are largely compounds, the corrosiveness of which cannot simply be calculated by adding together the corrosiveness of each individual component. In cases such as these the material compatibility data produced by the chemical manufacturer must be read as a matter of priority when selecting a material. Safety data sheets do not provide this information and cannot therefore replace application-specific documentation.

Corrosive agent	Concentration in %	Evaluation
Acetic acid	50	o
Acetic acid (wine vinegar)		o
Acetic acid anhydride	100	-
Acetic acid, aqueous	10	+
Acetic ester	100	-
Acetone	all	-
Acetylene tetrabromide	100	-
Aluminium salts, aqueous	all	+
Alums of all kinds, aqueous	all	+
Ammonium salts	all	+
Ammonium, aqueous	15	-
Ammonium, aqueous	saturated	-
Aniline	100	-
Benzene	100	-
Bisulphite, aqueous	40	+
Borax solution	all	+
Boric acid, aqueous	10	+
Bromine, vaporous and liquid		-
Butanol	100	+
Butyl acetate	100	-
Butyric acid, aqueous	20	+
Butyric acid, aqueous	conc.	-
Calcium chloride, aqueous	all	+
Carbon disulphide	100	-
Carbonic acid	all	+
Caustic potash	15	+
Chlorinated hydrocarbons	all	-
Chrome-alum, aqueous	all	+
Chromic acid, aqueous	50	-
Copper sulphate, aqueous	all	+
Creosote		-
Dextrin, aqueous	saturated	+
Diesel oils, compressed oils	100	o
Diethyl ether	100	-
Difluorodichloromethane	100	-
Ethanol	96	-
Ethyl acetate	100	-
Ethylene glycol	30	+
Ferric chloride, aqueous	all	+
Fertilizing manure salt, aqueous	all	+
Formaldehyde, aqueous	30	o
Glacial acetic acid	100	-
Glucose, aqueous	saturated	+
Glycerol	100	-
Halogens	all	-

ProMinent® Chemical Resistance List

Corrosive agent	Concentration in %	Evaluation
Hydrochloric acid	15	+
Hydrogen bromide	10	+
Hydrogen peroxide	to 10	+
Hydrogen sulphide, gaseous	100	-
Ink		+
Magnesium salts, aqueous	all	+
Methyl alcohol	100	+
Methylene chloride	100	-
Nitric acid, aqueous	25	+
Oils => fats, diesel oil, Lubricating oil and similar		
Perchloric acid	all	o
Phenol, aqueous	all	o
Phosphoric acid, aqueous	100	-
Potassium bichromate, aqueous	saturated	+
Potassium persulphate, aqueous	saturated	+
Silver nitrate	10	+
Sodium chloride, aqueous	all	+
Sodium hydroxide	aqueous	+
Sodium hypochlorite	15	+
Sodium salts => sodium chloride		
Sulphur dioxide, gaseous	all	+
Sulphuric acid	30	+
Tetrachloromethane	100	-
Toluene	100	-
Trichloroethylene	100	-
Urea, aqueous	all	+
Xylene	100	-
Zinc salts	all	+

Product catalogue 2016

Order your personal copy.
How you want it, when you want it.

Groundbreaking diversity: ProMinent 2016.
Our product catalogue is available in four individual volumes. We are offering you the following options so that you can request your catalogue of choice.



Metering pumps, components and metering systems



Motor-driven and process metering pumps for all capacity ranges



Measuring, control and sensor technology



Water treatment and water disinfection

You can find the ProMinent app for iPads in the iTunes App Store.
www.prominent.com/app

Available on the App Store

You can find our individual catalogue volumes for download or online browsing at
www.prominent.com/en/product-catalogue
Or request your own printed copy directly from us at
www.prominent.com/en/catalogue-request

Do you need an overview of our entire product range?
Then we would recommend our product overview.
www.prominent.com/en/productoverview