- > Ø 25 ... 40 mm
- > New compact, space-saving design
- > Proven sealing system
- > Integral switch mounting
- > Buffer or adjustable cushioning
- > Standard foot mountings



Technical features

Medium:
Compressed air, filtered, lubricated or non-lubricated
Operation:
Double acting
Buffer or adjustable cushioning
Magnetic or non-magnetic piston

Operating pressure:
1 ... 8 bar
Operating temperature:
-30°C ... +80°C max.
Consult our Technical Service for use below +2°C.
Cylinder Diameters:
25, 32, 40 mm
Strokes:
6000 mm or 235 inches max.
longer strokes on request

Materials:
Barrel: Anodised aluminium alloy
End covers: Zinc plated steel / aluminium
Yoke: Anodised aluminium alloy
Cover and Pistons: Plastic
Sealing strip: Polyurethane
Cover strip: Polyamide
Seals: Nitrile rubber and polyurethane

Ordering Examples:
See page 1.6.005.02
Mountings and Switches:
See page 1.6.005.02

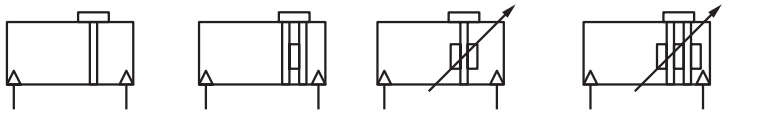

Non-magnetic piston
Buffer cushioning

Magnetic piston
Buffer cushioning

Non-magnetic piston
Adjustable cushioning

Magnetic piston
Adjustable cushioning



Option selector

A440★★AA★A★★★★★

Cylinder Diameters (mm)	Substitute
	25, 32 or 40
Variants	**Substitute**
Buffer cushioning, non-magnetic piston	A
Buffer cushioning, magnetic piston	B
Adjustable cushioning, non-magnetic piston	C
Adjustable cushioning, magnetic piston	D
Porting	**Substitute**
ISO G-thread	A
NPT-thread	N

Note: When specifying NPT ports the stroke should be given in inches.
Part number must retain the given number of digits e.g. A44025AACAAO800 (stroke 800 mm).

★★★

Stroke length in mm for ISO G-thread
max. 600 mm
Stroke length in full inches for NPT-thread
235 max.

★

Fractional increments of stroke (inches)					
Substitute		**Substitute**		**Substitute**	
0	A	3/8	G	3/4	P
1/16	B	7/16	H	13/16	R
1/8	C	1/2	J	7/8	S
3/16	D	9/16	K	15/16	T
1/4	E	5/8	M	Special	X
5/16	F	11/16	N		

Our policy is one of continued research and development. We therefore reserve the right to amend, without notice, the specifications given in this document.

Mountings

Model Ø	Style 'S'	Style 'V'
		
	Page 5	Page 5
25	Q44025AAAAAM337	Q44025AAAAAM332
32	Q44032AAAAAM337	Q44032AAAAAM332
40	Q44040AAAAAM337	Q44040AAAAAM332

Switches

Model		
	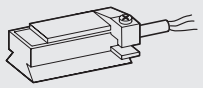	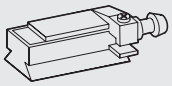
Reed	M/40	M/40/P
Solid state	M/41, M/42	M/42/P

Model Reed	Solid state	Voltage a.c.	d.c.	Current Max.	Temperature °C	LED	Features	Cable Length	Cable Type	Plug-in Cable Straight	90°	Catalogue Page
M/40/2	—	10 to 240	10 to 170	0,18 A	-20° to +80°	•	—	2 m	PVC 2 x 0,25	—	—	N 4.3.041
M/40/C/2	—	10 to 110	10 to 175	0,25 A	-20° to +80°	—	Changeover	2 m	PVC 3 x 0,25	—	—	N 4.3.041
M/40/P	—	10 to 60	10 to 75	0,18 A	-20° to +80°	•	—	2 m	PVC 3 x 0,25	M/P34614/5	M/P34615/5	N 4.3.041
—	M/41/2	—	10 to 30	0,20 A	-20° to +70°	•	NPN	2 m	PVC 3 x 0,25	—	—	N 4.3.043
—	M/42/2	—	10 to 30	0,20 A	-20° to +70°	•	PNP	2 m	PVC 3 x 0,25	—	—	N 4.3.043
—	M/42/P	—	10 to 30	0,20 A	-20° to +70°	•	PNP	2 m	PVC 3 x 0,25	M/P34614/5	M/P34615/5	N 4.3.043

Full information on switches (technical data, polyurethane cable, dimensions etc.) please refer to relevant catalogue pages

Ordering Examples

Cylinders
To order a 25 mm bore cylinder with adjustable cushioning, magnetic piston and a 800 mm stroke quote:
A44025AADAA0800

Mountings
To order a centre support mounting style 'V' for 25 mm bore cylinder quote: **Q44025AAAAAM332**

Switches
To order a reed switch with LED and 2 m cable length quote: **M/40**

Loading values for LINTRA-LITE® cylinders

The values given in the table below show the forces in the directions Fy and Fz and the maximum moments Mx, My and Mz. All values are applicable for speeds up to 0,2 m/s. A requirement for using these values is a smooth movement of the mass over the whole stroke length of the cylinder. The reference point from which the moments for all cylinders should be calculated is the centre line of the piston.

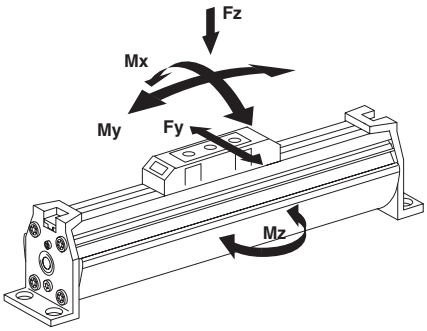

Total loads
When a LINTRA-LITE® cylinder has to take several loads and moments, an additional calculation is necessary using the following formula:

$$\frac{Mx}{Mx\ max} + \frac{My}{My\ max} + \frac{Mz}{Mz\ max} + \frac{Fy}{Fy\ max} + \frac{Fz}{Fz\ max} \leq 1$$

Thrust • Air consumption • Cushion length • Loading values

Cylinder Ø	Theoretical forces at 6 bar (N)	Air consumption per stroke at 6 bar (l/cm)	Cushion length (mm)	Loading values Fy (N)	Fz (N)	Mx (Nm)	My (Nm)	Mz (Nm)
25	250	0,035	18	90	280	1	13	4
32	410	0,056	23	120	370	2	21	6
40	640	0,088	35	240	720	4	56	16

Loading values applicable to a speed of ≤ 0,2 m/s. Maximum working life is normally reached below a speed of 1 m/s.

Our policy is one of continued research and development. We therefore reserve the right to amend, without notice, the specifications given in this document.

Cylinder Deflection

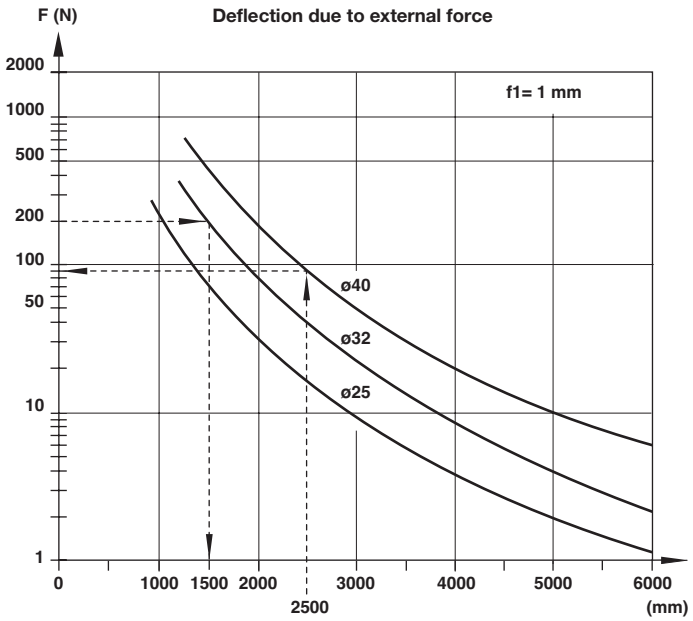

Cylinder Ø 32 mm, stroke length 3500 mm, external load 200 N
Maximum distance between supports = 1500 mm (see diagram).
Therefore additional support is required.

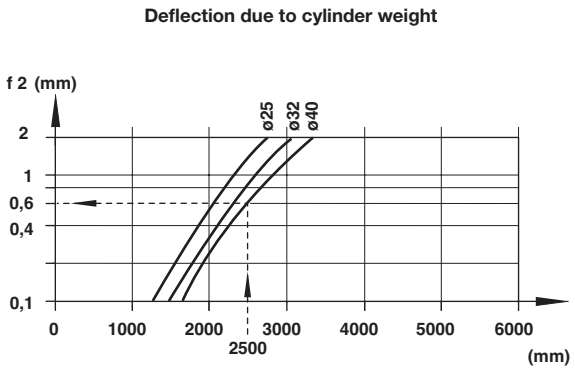

Cylinder Ø 40 mm, external force 120 N, distance between supports 2500 mm
Required: Total deflection
1.Deflection due to external force (f1):
See diagram > (1mm/90 N) · 120 N **1,3 mm**
2.Deflection due to cylinder weight (f2): See diagram > **+0,6 mm**
Total deflection: **1,9 mm**

Maximum permitted deflection:
f1 + f2 ≤ 1 mm per 1000 mm stroke
Result:
1,9 mm are below the max. permitted deflection of 2,5 mm

Our policy is one of continued research and development. We therefore reserve the right to amend, without notice, the specifications given in this document.

Basic dimensions

A44000 . . . — Standard Cylinders

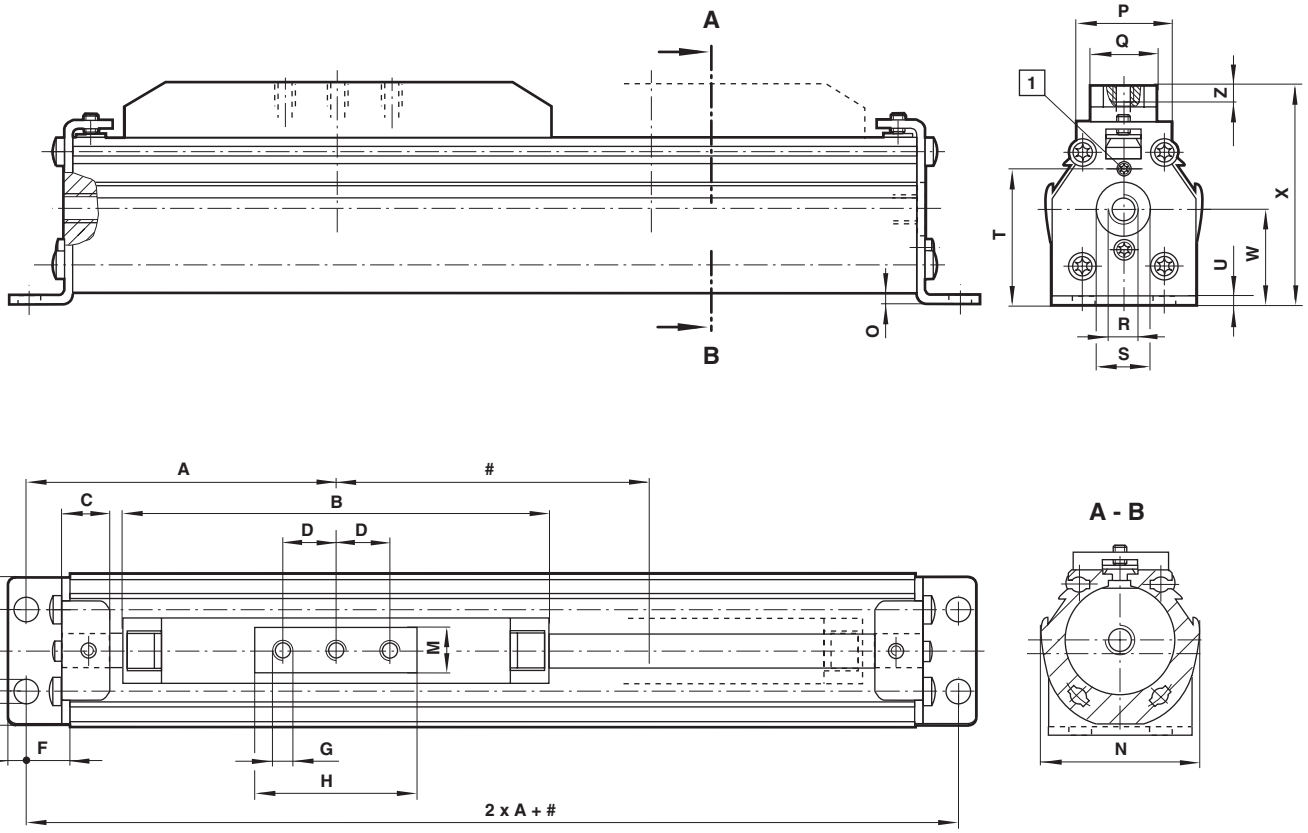

1 Cushion screw for cylinders with adjustable cushioning

stroke

Cylinder Ø	A	B	C	D	E	F	G	H	J	K	Ø L	M	N
25	77	100	12	12,5	5	12	M 5	40	36	18	7	18	40
32	93	120	18	15	7	15	M 6	50	48	26	9	20	49,5
40	117,5	165	18	20	7	17	M 6	60	54	30	9	20	57

Cylinder Ø	O	P	Q	R (Port threads)		Ø S	T	U	W	X	Z max.	at 0 mm	per 100 mm
25	2,5	28	22	G 1/8	NPT 1/8	12	30,5	2	21,5	53,5	7	0,50 kg	0,15 kg
32	3,5	32	24	G 1/8	NPT 1/8	17	40	3	28,5	70	10	0,80 kg	0,25 kg
40	3,5	36	24	G 1/4	NPT 1/4	20	49,5	3	35	81,5	10	1,30 kg	0,35 kg

* Optional ISO G or NPT-thread

Our policy is one of continued research and development. We therefore reserve the right to amend, without notice, the specifications given in this document.

Mountings

Q44000AAAAAM332 — Centre Support Mounting Style 'V'

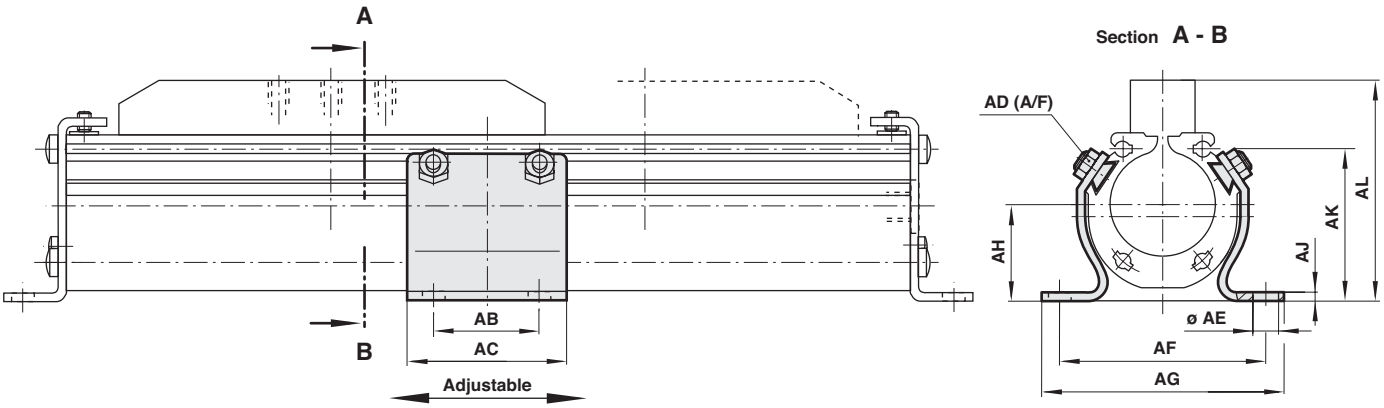

Q44000AAAAAM337 — Swinging Bridge Mounting Style 'S'

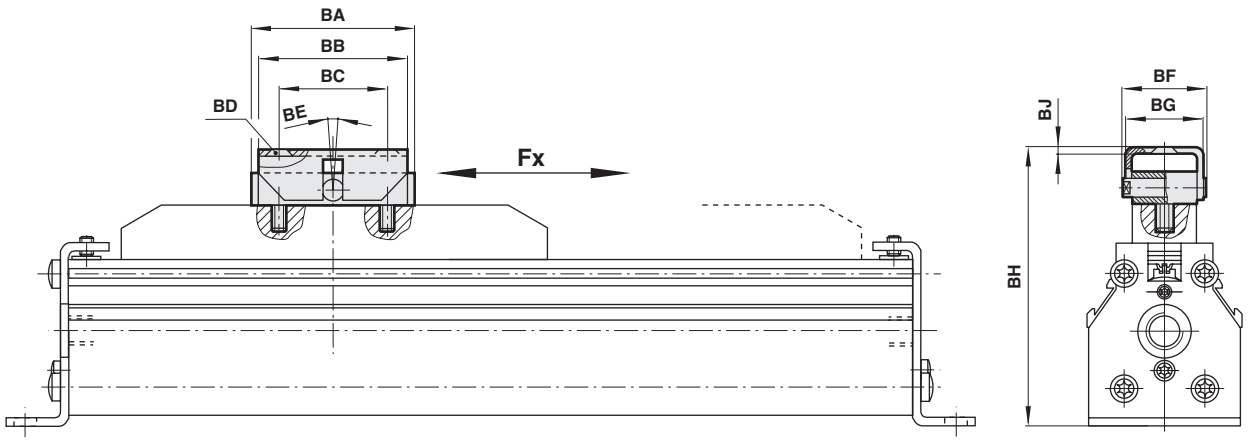

Cylinder Ø	AB	AC	AD (A/F)	Ø AE	AF	AG	AH	AJ	AK	AL	BA
25	25	40	10	6,6	58	70	21,5	3	31	53,5	40
32	30	50	10	9	70	83	28,5	3	43	70	50
40	40	60	10	9	79	92	35	3	55	81,5	60

Cylinder Ø	BB	BC	BD (DIN 74)	BE	BF	BG	BH	BJ	Fx	Style 'S'	Style 'V'
25	40	28	BM 5	± 8	29	28	68,5 +5	2	250 N	0,15 kg	0,07 kg
32	55	40	BM 6	± 8	31	30	87,5 + 5	2	410 N	0,20 kg	0,15 kg
40	55	40	BM 6	± 8	31	30	99,5 + 5	2	640 N	0,25 kg	0,25 kg

Our policy is one of continued research and development. We therefore reserve the right to amend, without notice, the specifications given in this document.

Spares

Cylinders with buffer cushioning

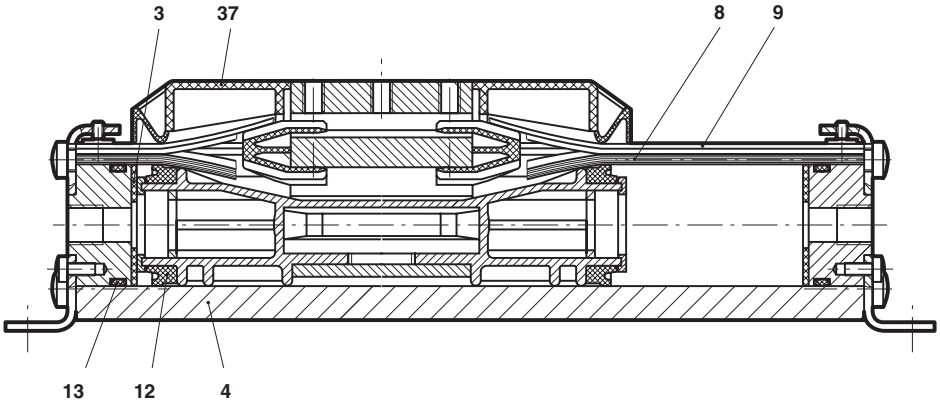

Cylinders with adjustable cushioning

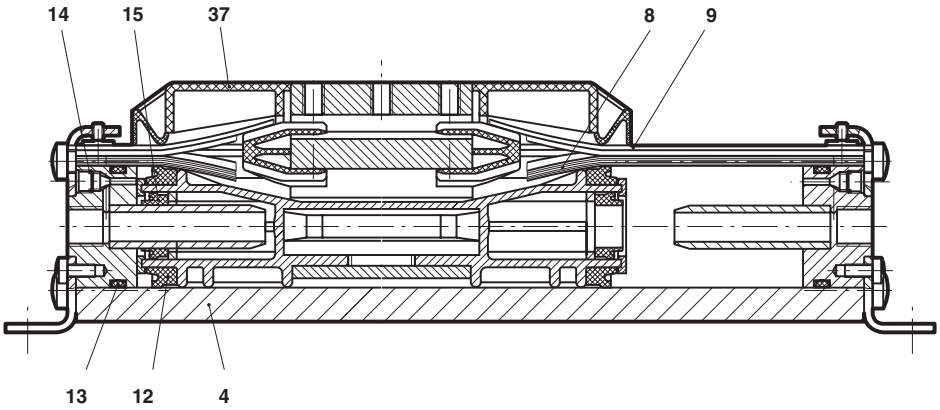

Cylinder Ø	Model	Spares kit	Comprising Item	Description	Quantity	Seal strip Item 8	Cover strip Item 9	Barrel Item 4
25	A44025AA★AA	Q44025AACAAT788*	3	Buffer	2	M/P41628/*	M/P41631/*	M/P41607/*
32	A44032AA★AA	Q44032AACAAT788*	8/9	Seal/cover strip	1/1	M/P41629/*	M/P41632/*	M/P41613/*
40	A44040AA★AA	Q44040AACAAT788*	12/15	Piston/cushion seal	2/2	M/P41630/*	M/P41633/*	M/P41602/*
			13/14	O-Ring	2/2			
			37	Cover	1			
				Grease	2			

★ Variants A, B, C or D
* Insert stroke length
Note: Spares kits are common for all cylinder types
Please quote the cylinder type number when ordering spare parts

Warning

These products are intended for use in industrial compressed air systems only. Do not use these products where pressures and temperatures can exceed those listed under **»Technical features/data«**.
Before using these products with fluids other than those specified, for non-industrial applications, life-support systems or other applications not within published specifications, consult IMI Precision Engineering.
Through misuse, age, or malfunction, components used in fluid power systems can fail in various modes.

The system designer is warned to consider the failure modes of all component parts used in fluid power systems and to provide adequate safeguards to prevent personal injury or damage to equipment in the event of such failure.
System designers must provide a warning to end users in the system instructional manual if protection against a failure mode cannot be adequately provided.
System designers and end users are cautioned to review specific warnings found in instruction sheets packed and shipped with these products.

Our policy is one of continued research and development. We therefore reserve the right to amend, without notice, the specifications given in this document.