Brand of NTN corporation

Technical data

USFD204

Bearing units



Grey cast housing, radial insert ball bearing with socket set screws, single lip seal

KIT CONTENT

US204G2, FD204

VISUAL (S)

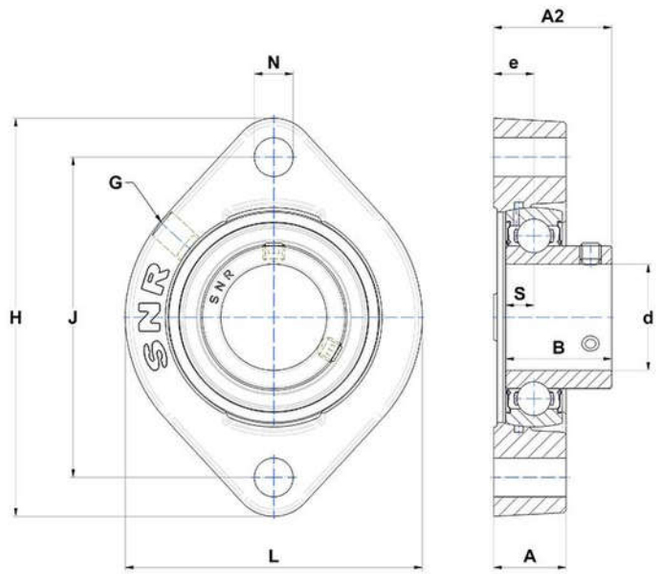

PRODUCT DEFINITION

Brand	SNR
A - Housing height	17 mm
A2 - Total height from mounting surface	27,5 mm
B - Width of Inner Ring	25 mm
d - Shaft diameter	20 mm
e - Distance mounting surface to bearing center	9,5 mm

NTN Europe
1 rue des Usines · BP 2017 · 74010 Annecy Cedex · France · Tel. +33 (0)4 50 65 30 00
S.A. au capital de 322 639 919 € · RCS ANNECY B 325 821 072 · Id. Fiscale : FR 48 325 821 072
SIRET 325 821 072 00015 · Code APE 2815 Z · Code NACE 28.15

PRODUCT DEFINITION	
G - Grease fitting	M6x1
H - Housing length, width or diameter	90,5 mm
J - Mounting holes distance	71,4 mm
L - Housing width / diameter	66,5 mm
N - Mounting hole dimension	9 mm
S - Distance front side/bearing centre	7 mm

PRODUCT PERFORMANCE	
C - Dynamic load rating	12800000 mN
C0 - Static load rating	6650000 mN
Operating temperature min.	253,15 °K
Operating temperature max.	373,15 °K

OTHER FEATURES	
Mass	0,33 kg
Recommended tightening torque for set screw	5.5 N-m