E21301

Mounting set for reflectors

SYSTEM COMPONENT REFL BOLT

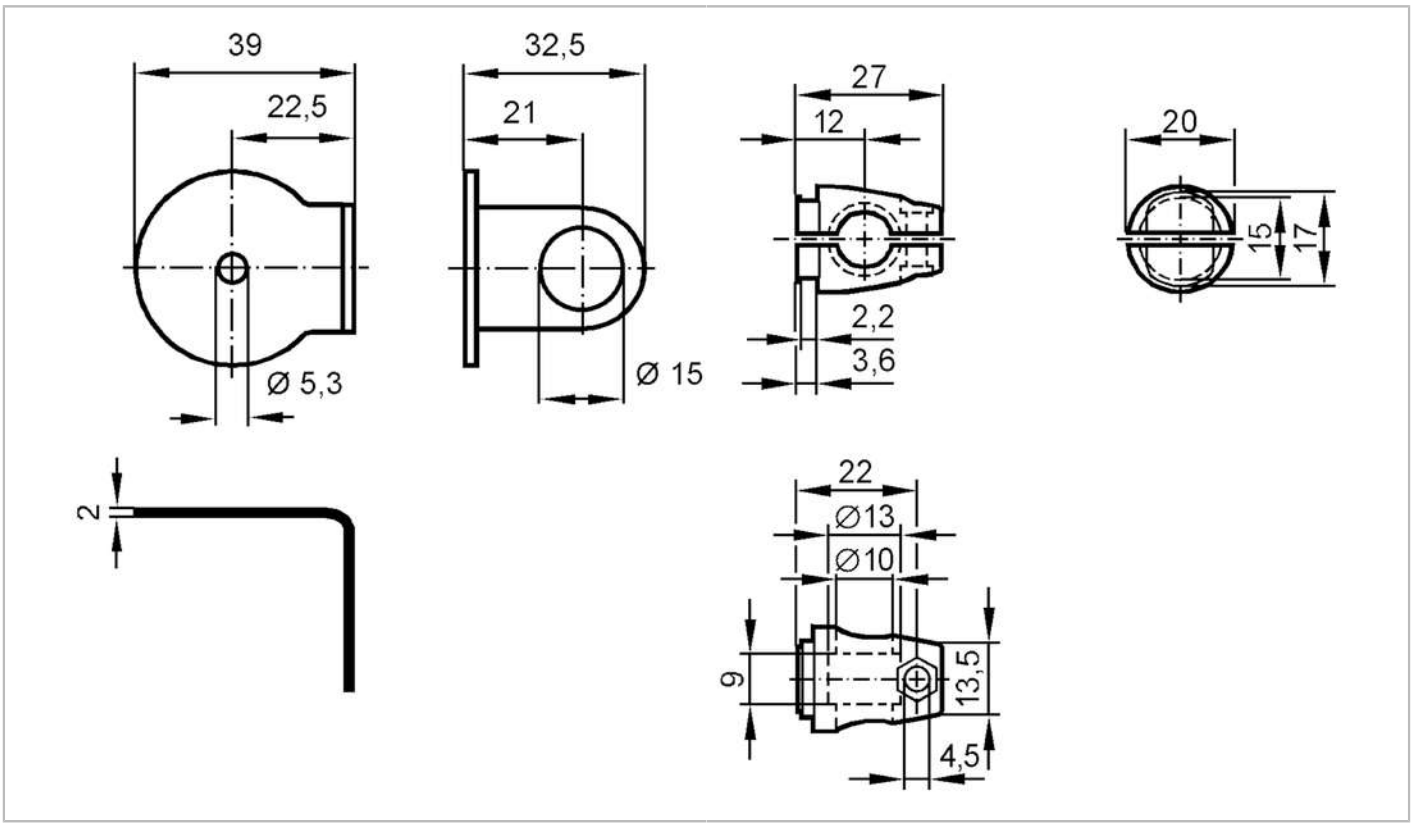

Application		
Design		clamp mounting, for reflector, Ø 35 mm
Mechanical data		
Weight	[g]	169
Type of mounting		Mounting rod; (M8)
Materials		fixture: stainless steel (1.4571/316Ti); Clamp: diecast zinc
Accessories		
Items supplied		Mounting rod: 1 x 125 mm, diameter 10 mm
		Thread dimensions: M8, 25 mm
		Material:, stainless steel (1.4404 / 316L)
Remarks		
Pack quantity		1 pcs.