AC centrifugal fan - RadiCal

backward curved, single inlet

ebm-papst Mulfingen GmbH & Co. KG
Bachmühle 2 · D-74673 Mulfingen
Phone +49 7938 81-0
Fax +49 7938 81-110
info1@de.ebmpapst.com
www.ebmpapst.com

Limited partnership · Headquarters Mulfingen
County court Stuttgart · HRA 590344

General partner Elektrobau Mulfingen GmbH · Headquarters Mulfingen
County court Stuttgart · HRB 590142

Nominal data

Type	**R2E220-RB06-01**
Motor	**M2E068-CF**

Phase		1~	1~
Nominal voltage	VAC	230	230
Frequency	Hz	50	60
Type of data definition		ml	ml
Valid for approval / standard		CE	CE
Speed	min^{-1}	2500	2650
Power input	W	102	135
Current draw	A	0.45	0.60
Motor capacitor	µF	2.5	2.5
Capacitor voltage	VDB	400	400
Capacitor standard		P0 (CE)	P0 (CE)
Min. back pressure	Pa	0	0
Min. ambient temperature	°C	-25	-25
Max. ambient temperature	°C	60	70
Starting current	A	0.85	0.82

ml = max. load · me = max. efficiency · fa = running at free air · cs = customer specs · cu = customer unit
Subject to alterations

AC centrifugal fan - RadiCal

backward curved, single inlet

Technical features

Size	220 mm
Surface of rotor	Coated in black
Material of impeller	Plastic PA6, fibreglass-reinforced
Number of blades	7
Direction of rotation	Clockwise, seen on rotor
Type of protection	IP 44; Depending on installation and position as per EN 60034-5
Insulation class	"F"
Humidity class	F1-2
Max. permissible ambient motor temp. (transp./ storage)	+ 80 °C
Min. permissible ambient motor temp. (transp./storage)	- 40 °C
Mounting position	Shaft horizontal or rotor on bottom; rotor on top on request
Condensate discharge holes	Rotor-side
Operation mode	S1
Motor bearing	Ball bearing
Touch current acc. IEC 60990 (measuring network Fig. 4, TN system)	< 0.75 mA
Motor protection	Thermal overload protector (TOP) wired internally
Cable exit	Variable
Protection class	I (if protective earth is connected by customer)
Product conforming to standard	EN 60335-1; CE
Approval	GOST

ebm-papst Mulfingen GmbH & Co. KG · Bachmühle 2 · D-74673 Mulfingen · Phone +49 (0) 7938 81-0 · Fax +49 (0) 7938 81-110 · info1@de.ebmpapst.com · www.ebmpapst.com

AC centrifugal fan - RadiCal

backward curved, single inlet

Product drawing

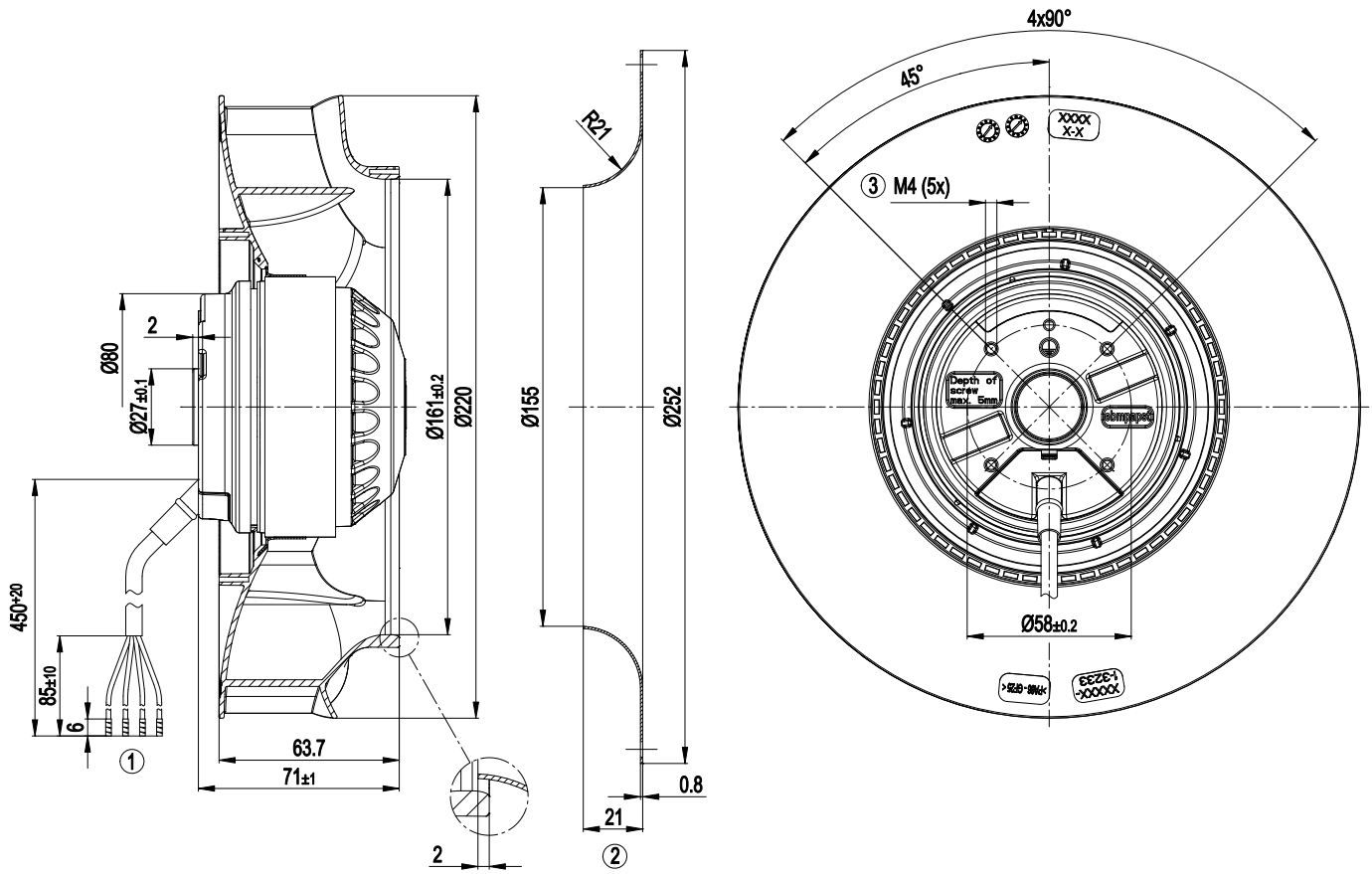

1	Connection line silicone 4G 0.5 mm², 4x brass lead tips crimped
2	Accessory part: Inlet nozzle 09609-2-4013, not included in the standard scope of delivery
3	Depth of screw max. 5 mm

Connection screen

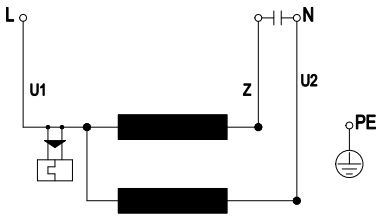

U1	blue	Z	brown	U2	black
PE	green/yellow				

ebm-papst Mulfingen GmbH & Co. KG · Bachmühle 2 · D-74673 Mulfingen · Phone +49 (0) 7938 81-0 · Fax +49 (0) 7938 81-110 · info1@de.ebmpapst.com · www.ebmpapst.com

AC centrifugal fan - RadiCal

backward curved, single inlet

Charts: Air flow 50 Hz

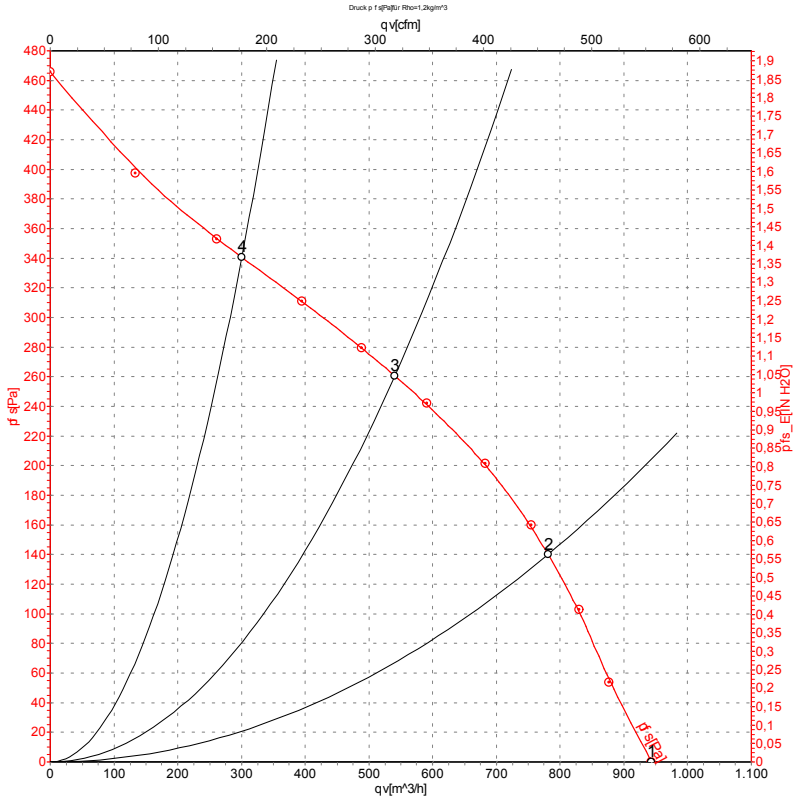

Measurement: LU-129486

Air performance measured as per ISO 5801 Installation category A. For detailed information on the measuring set-up, please contact ebm-papst. Suction-side noise levels: LwA measured as per ISO 13347 / LpA measured with 1m distance to fan axis. The values given are valid under the measuring conditions mentioned above and may vary according to the actual installation situation. With any deviation from the standard set-up, the specific values have to be checked and reviewed with the unit installed.

Measured values

	U	f	n	P_e	I	LpA_{in}	LwA_{in}	qv	p_{fs}
	V	Hz	min^{-1}	W	A	dB(A)	dB(A)	m^3/h	Pa
1	230	50	2600	90	0.40	63	70	945	0
2	230	50	2575	95	0.43	59	66	780	140
3	230	50	2500	102	0.45	56	64	540	260
4	230	50	2580	95	0.42	59	67	300	340

U = Supply voltage · f = Frequency · n = Speed · P_e = Power input · I = Current draw · LpA_{in} = Sound pressure level inlet side · LwA_{in} = Sound power level inlet side · qv = Air flow
p_{fs} = Pressure increase

ebm-papst Mulfingen GmbH & Co. KG · Bachmühle 2 · D-74673 Mulfingen · Phone +49 (0) 7938 81-0 · Fax +49 (0) 7938 81-110 · info1@de.ebmpapst.com · www.ebmpapst.com

AC centrifugal fan - RadiCal

backward curved, single inlet

Charts: Air flow 60 Hz

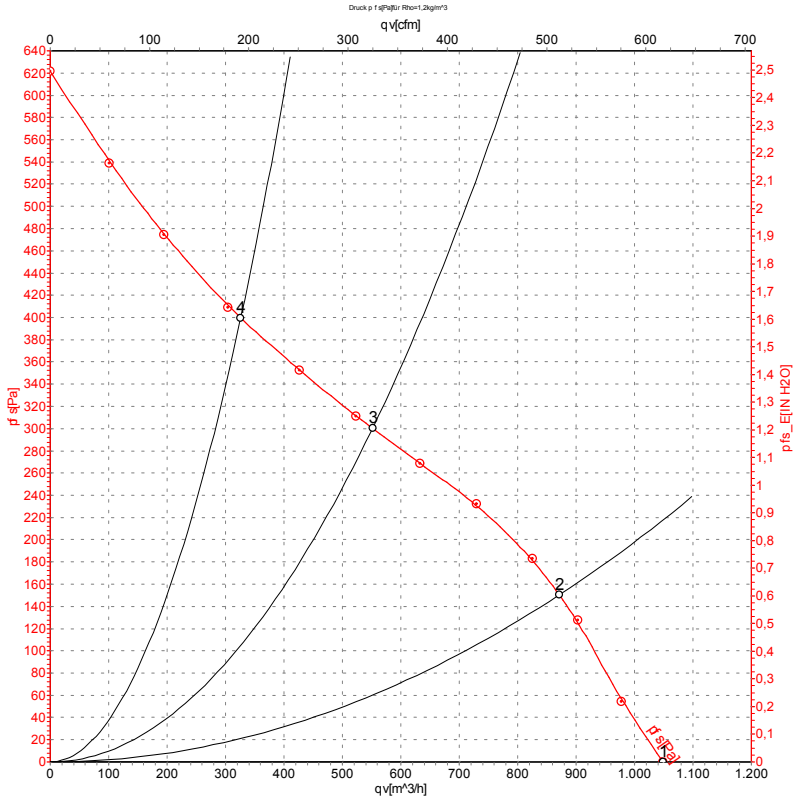

Measurement: LU-129487

Air performance measured as per ISO 5801 Installation category A. For detailed information on the measuring set-up, please contact ebm-papst. Suction-side noise levels: LwA measured as per ISO 13347 / LpA measured with 1m distance to fan axis. The values given are valid under the measuring conditions mentioned above and may vary according to the actual installation situation. With any deviation from the standard set-up, the specific values have to be checked and reviewed with the unit installed.

Measured values

	U	f	n	P_e	I	LpA_{in}	LwA_{in}	qv	p_{fs}
	V	Hz	min^{-1}	W	A	dB(A)	dB(A)	m^3/h	Pa
1	230	60	2900	120	0.53	65	73	1050	0
2	230	60	2805	127	0.55	61	68	870	150
3	230	60	2650	135	0.60	58	66	550	300
4	230	60	2795	126	0.55	61	69	325	400

U = Supply voltage · f = Frequency · n = Speed · P_e = Power input · I = Current draw · LpA_{in} = Sound pressure level inlet side · LwA_{in} = Sound power level inlet side · qv = Air flow
p_{fs} = Pressure increase

ebm-papst Mulfingen GmbH & Co. KG · Bachmühle 2 · D-74673 Mulfingen · Phone +49 (0) 7938 81-0 · Fax +49 (0) 7938 81-110 · info1@de.ebmpapst.com · www.ebmpapst.com