EY5052

Mounting stand for safety light grids

FLOOR MOUNT.PROTECTION 4 BEAMS

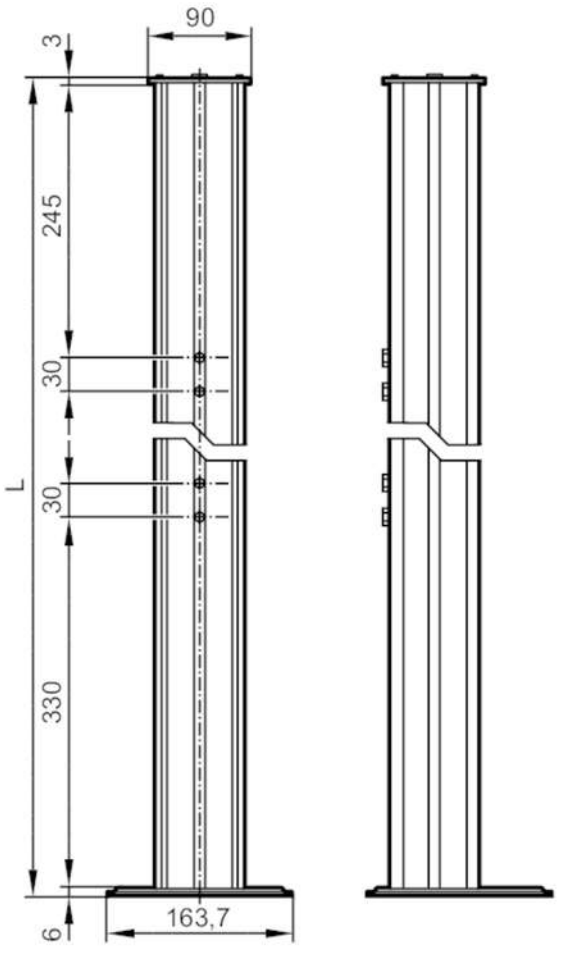

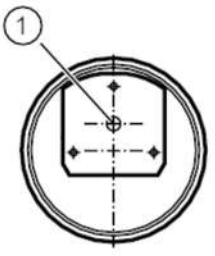

Application		
Design		for safety light grids, 2 beams, 3 beams, 4 beams
Mechanical data		
Weight	[g]	5495
Dimensions	[mm]	Ø 90
Materials		aluminium epoxy-powder coated; plastics
Length	[mm]	1330
Accessories		
Items supplied		socket head screws: 6
Remarks		
Pack quantity		1 pcs.