Data sheet

Multifunctional three-phase monitoring relays CM-MPS
CM-MPS.23 and CM-MPS.43

The three-phase monitoring relays CM-MPS.x3 monitor the phase parameters phase sequence, phase failure, over- and undervoltage as well as phase unbalance. The devices can be used for mains with a frequency of 45-440 Hz.

All devices are available with two different terminal versions. You can choose between the proven screw connection technology (double-chamber cage connection terminals) and the completely tool-free Easy Connect Technology (push-in terminals).



2CDC 251 065 V0011

Characteristics

- Monitoring of three-phase mains for phase sequence (can be switched off), phase failure, over- and undervoltage as well as phase unbalance
- TRMS measuring principle
- Automatic phase sequence correction configurable
- Interrupted neutral monitoring (CM-MPS.23)
- CM-MPS.23 can also be used to monitor single-phase mains
- Can be used for mains with a frequency of 45 to 440 Hz
- Threshold values for over- and undervoltage as well as phase unbalance are adjustable as absolute values
- Tripping delay T_v can be adjusted or switched off by means of a logarithmic scale (0 s; 0,1-30 s)
- ON-delayed or OFF-delayed tripping delay selectable
- Powered by the measuring circuit
- Precise adjustment by front-face operating controls
- Screw connection technology or Easy Connect Technology available
- Housing material for highest fire protection classification UL 94 V-0
- Tool-free mounting on DIN rail as well as demounting
- 1 x 2 or 2 x 1 c/o (SPDT) contacts configurable
- 22.5 mm (0.89 in) width
- 3 LEDs for the indication of operational states

Approvals

- UL 508, CAN/CSA C22.2 No.14
- GL
- GOST
- CB scheme
- CCC
- RMRS

Marks

- CE
- C-Tick

Power and productivity
for a better world™

Order data

Three-phase monitoring relays

Type	Rated control supply voltage = measuring voltage	Interrupted neutral monitoring	Connection technology	Order code
CM-MPS.23P	3 x 180-280 V AC	yes	Push-in terminals	1SVR 740 885 R4300
CM-MPS.23S		yes	Screw terminals	1SVR 730 885 R4300
CM-MPS.43P	3 x 300-500 V AC	no	Push-in terminals	1SVR 740 884 R4300
CM-MPS.43S		no	Screw terminals	1SVR 730 884 R4300

Accessories

Type	Description	Order code
ADP.01	Adapter for screw mounting	1SVR 430 029 R0100
MAR.12	Marker label for devices with DIP switches	1SVR 730 006 R0000
COV.11	Sealable transparent cover	1SVR 730 005 R0100

Connection technology

Maintenance free Easy Connect Technology with push-in terminals

Type designation CM-xxS.yyP

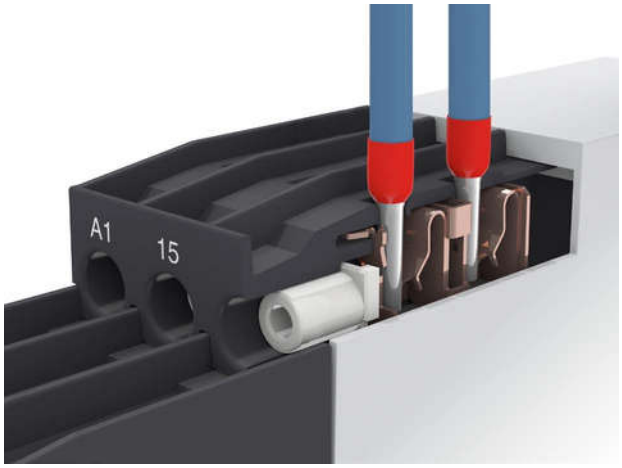

2CDC 253 026 F0011

Push-in terminals

- Tool-free connection of rigid and flexible wires with wire end ferrule according to DIN 46228-1-A, DIN 46228-4-E
  Wire size: 2 x 0.5-1.5 mm², (2 x 20 - 16 AWG)
- Easy connection of flexible wires without wire end ferrule by opening the terminals
- No retightening necessary
- One operation lever for opening both connection terminals
- For triggering the lever and disconnecting of wires you can use the same tool (Screwdriver according to DIN ISO 2380-1 Form A 0.8 x 4 mm (0.0315 x 0.157 in), DIN ISO 8764-1 PZ1 ø 4.5 mm (0.177 in))
- Constant spring force on terminal point independent of the applied wire type, wire size or ambient conditions (e. g. vibrations or temperature changes)
- Opening for testing the electrical contacting
- Gas-tight

Approved screw connection technology with double-chamber cage connection terminals

Type designation CM-xxS.yyS

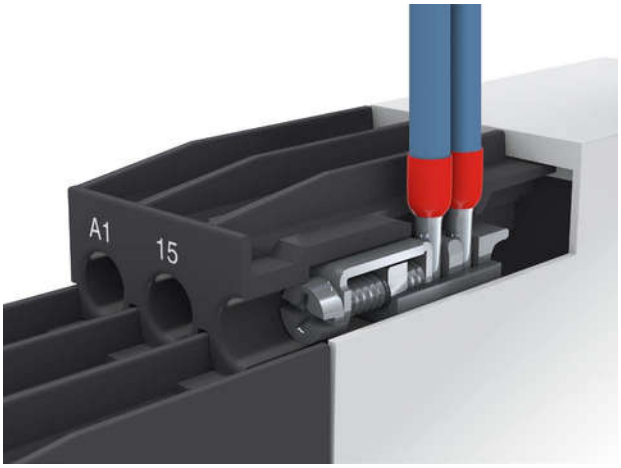

2CDC 253 025 F0011

Double-chamber cage connection terminals

- Terminal spaces for different wire sizes:
  fine-strand with/without wire end ferrule:
  1 x 0.5-2.5 mm² (2 x 20 - 14 AWG),
  2 x 0.5-1.5 mm² (2 x 20 - 16 AWG)
  rigid:
  1 x 0.5-4 mm² (1 x 20 - 12 AWG),
  2 x 0.5-2.5 mm² (2 x 20 - 14 AWG)
- One screw for opening and closing of both cages
- Pozidrive screws for pan- or crosshead screwdrivers according to DIN ISO 2380-1 Form A 0.8 x 4 mm (0.0315 x 0.157 in), DIN ISO 8764-1 PZ1 ø 4.5 mm (0.177 in)

Both the Easy Connect Technology with push-in terminals and screw connection technology with double-chamber cage connection terminals have the same connection geometry as well as terminal position.

Functions

Operating controls

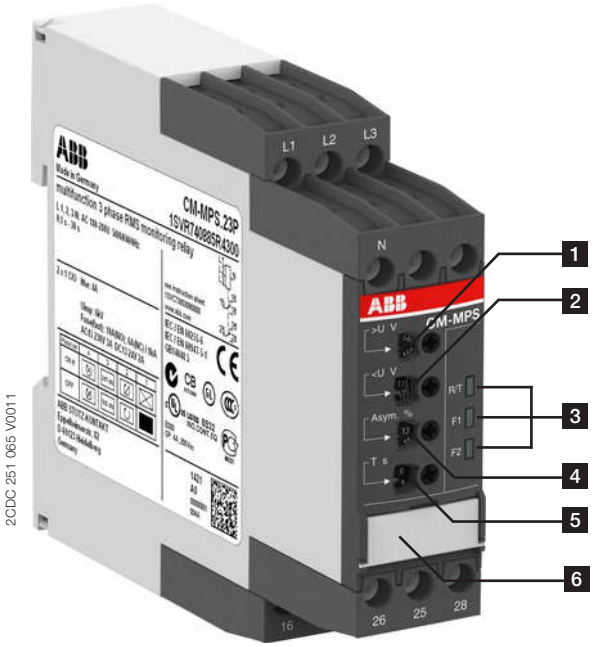

1 **Adjustment of the hysteresis >U for overvoltage**

2 **Adjustment of the threshold value <U for undervoltage**

3 **Indication of operational states**

R/T: red LED – Relay status / timing

F1: yellow LED – Fault message

F2: yellow LED – Fault message

4 **Adjustment of the threshold value Asym. for phase unbalance**

5 **Adjustment of the tripping delay T_v**

6 **DIP switches (see DIP switch functions)**

Application

The three-phase monitoring relays CM-MPS.x3 are designed for use in three-phase mains for monitoring the phase parameters phase sequence, phase failure, over- and undervoltage as well as phase unbalance. The devices can be used for mains with a frequency of 45-440 Hz.

The CM-MPS.x3 provide an adjustable tripping delay and work according to the closed-circuit principle.

Operating mode

The CM-MPS.x3 have 2 c/o (SPDT) contacts and are available for 3-wire AC systems (CM-MPS.43) and 4-wire AC systems (CM-MPS.23).

The units are adjusted with front-face operating controls. The selection of ON- ⊠ or OFF- ■ delay, phase sequence monitoring activated ⟲ or phase sequence monitoring deactivated ∅, 2 x 1 c/o 2x1 c/o or 1 x 2 c/o 1x2 c/o (SPDT) contacts as well as automatic phase sequence correction activated Ⓐ or automatic phase sequence correction deactivated Ⓐ is made with DIP switches. Potentiometers, with direct reading scale, allow the adjustment of the threshold values for overvoltage (>U), undervoltage (<U), phase unbalance (Asym %) and the tripping delay T_v. The tripping delay T_v is adjustable over a range of instantaneous to a 30 s delay. Timing is displayed by a flashing yellow LED labelled R/T.

For monitoring single-phase mains, all three external conductors (L1, L2, L3) have to be jumpered and connected as one single conductor. Phase sequence monitoring has to be deactivated and the threshold value for phase unbalance has to be set to the maximum (25 %).

Adjustment potentiometer

Threshold values

By means of three separate potentiometers with direct reading scales, the threshold values for over- and undervoltage as well as for phase unbalance can be adjusted within the measuring range.

	Measuring range for overvoltage	Measuring range for undervoltage	Measuring range for phase unbalance
CM-MPS.23	3 x 240-280 V AC	3 x 180-220 V AC	2-25 % of average of phase voltages
CM-MPS.43	3 x 420-400 V AC	3 x 300-380 V AC	

Tripping delay T_v

The tripping delay T_v can be adjusted within a range of 0.1 to 30 s by means of a potentiometer with logarithmic scale. By turning to the left stop, the tripping delay can be switched off.

Indication of operational states

LEDs, status information and fault messages

Operational state	R/T: LED yellow	F1: LED red	F2: LED red
Control supply voltage applied, output relay energized	⎍	-	-
Tripping delay T_v active	⎍⎍	-	-
Phase failure	-	⎍	⎍⎍
Phase sequence	-	⎍⎍ alternating	
Overvoltage	-	⎍	-
Undervoltage	-	-	⎍
Phase unbalance	-	⎍	⎍
Interruption of the neutral	-	⎍	⎍⎍
Adjustment error [1)]	⎍⎍	⎍⎍	⎍⎍

1)
Possible misadjustments of the front-face operating controls:
Overlapping of the threshold values: The threshold value for overvoltage is set to a smaller value than the threshold value for undervoltage.
DIP switch 3 = OFF and DIP switch 4 = ON: Automatic phase sequence correction is activated and selected operating mode is 1 x 2 c/o (SPDT) contacts
DIP switch 2 and 4 = ON: Phase sequence detection is deactivated and the automatic phase sequence correction is actived.

Function descriptions / diagrams

Interrupted neutral monitoring

The interruption of the neutral in the main to be monitored is detected by means of phase unbalance evaluation. If the star point is displaced by asymmetrical load in the three-phase main, an interrupted neutral will be detected. Determined by the system, in case of unloaded neutral, i.e. symmetrical load between all three phases, it may happen that an interruption of the neutral will not be detected.

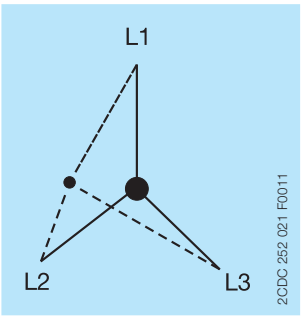

Phase sequence and phase failure monitoring

Applying control supply voltage begins the fixed start-up delay T_s. When T_s is complete and all phases are present with correct voltage, the output relays energize and the yellow LED R/T is on.

Phase sequence monitoring:

If phase sequence monitoring is activated (DIP switch 2 = OFF), the output relays de-energize as soon as a phase sequence error occurs. The fault is displayed by alternated flashing of the LEDs F1 and F2. The output relays re-energize automatically as soon as the phase sequence is correct again.

If phase sequence monitoring is deactivated (DIP switch 2 = ON), a phase sequence error will not cause tripping of the relays. The output relays do not change state and the LEDs F1 and F2 don‘t flash.

Phase failure monitoring:

The output relays de-energize instantaneously if a phase failure occurs. The fault is indicated by lightning of LED F1 and flashing of LED F2. The output relays re-energize automatically as soon as the voltage returns to the tolerance range.

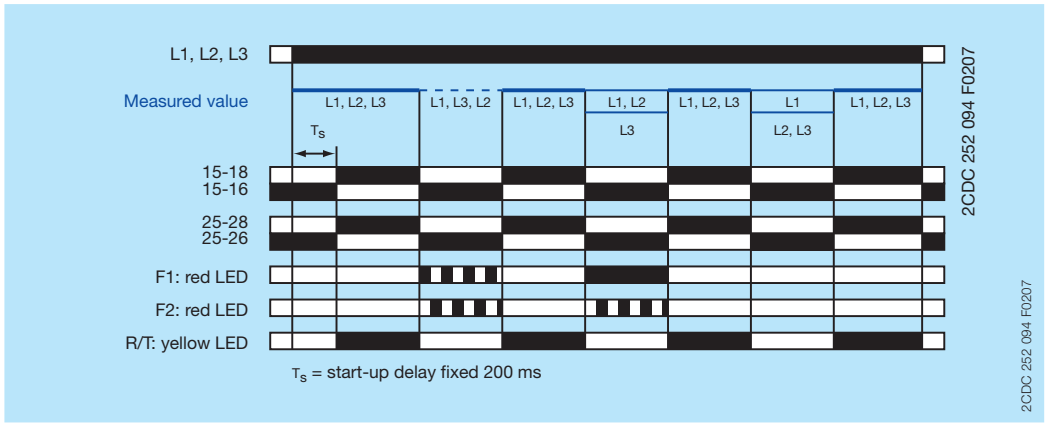

Over- and undervoltage monitoring 1 x 2 c/o (SPDT) contacts 1x2 c/o

Applying control supply voltage begins the fixed start-up delay T_s. When T_s is complete and all phases are present with correct voltage and with correct phase sequence, the output relays energize and the yellow LED R/T is on.

Type of tripping delay = ON-delay ⊠

If the voltage to be monitored exceeds or falls below the set threshold value, the output relays de-energize after the set tripping delay T_v is complete. The LED R/T flashes during timing and turns off as soon as the output relays de-energize.

The output relays re-energize automatically as soon as the voltage returns to the tolerance range, taking into account a fixed hysteresis of 5 %. The LED R/T is on.

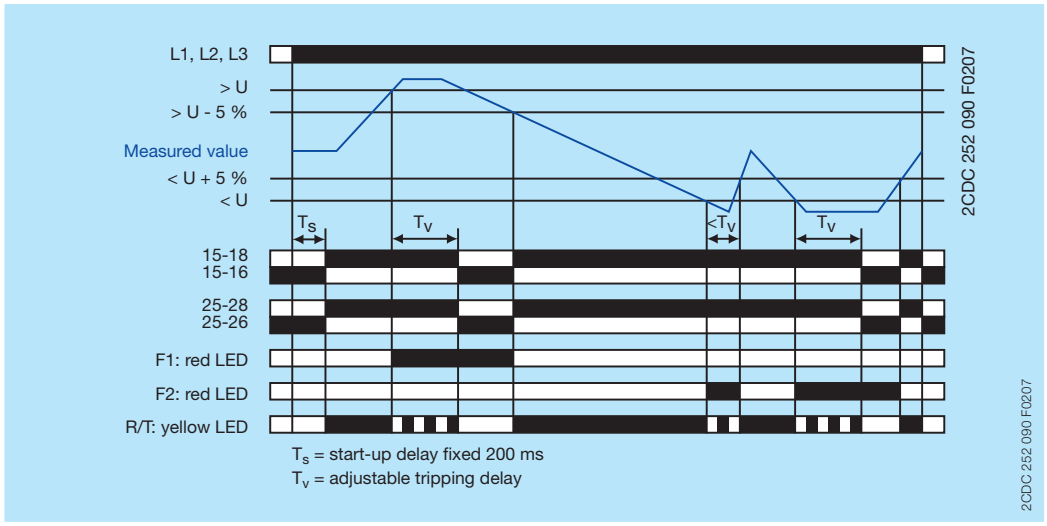

Type of tripping delay = OFF-delay ■

If the voltage to be monitored exceeds or falls below the set threshold value, the output relays de-energize instantaneously and the LED R/T turns off.

As soon as the voltage returns to the tolerance range, taking into account a fixed hysteresis of 5 %, the output relays re-energize automatically after the set tripping delay T_v is complete. The LED R/T flashes during timing and turns steady when timing is complete.

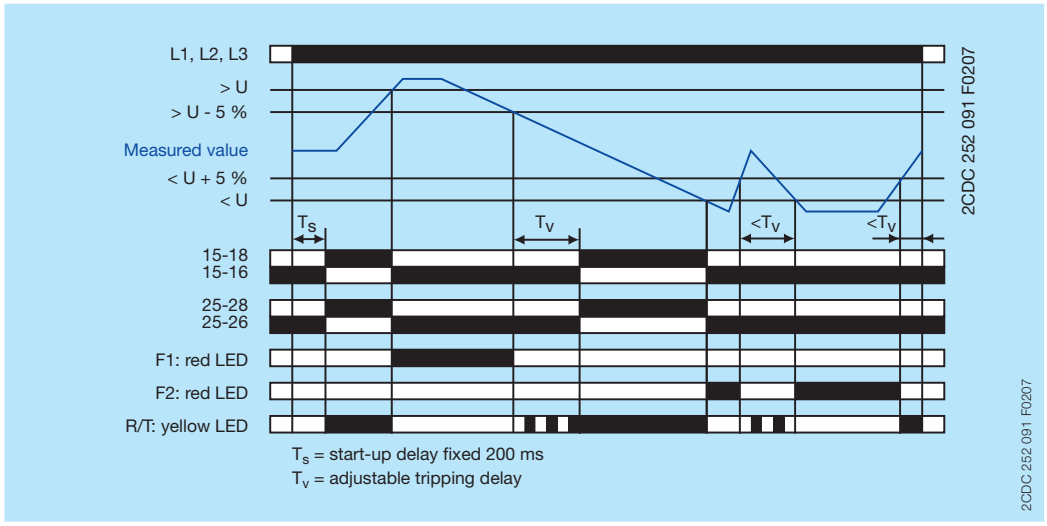

Over- and undervoltage monitoring 2 x 1 c/o (SPDT) contacts 2x1 c/o

Applying control supply voltage begins the fixed start-up delay T_s. When T_s is complete and all phases are present with correct voltage and with correct phase sequence, the output relays energize. The yellow LED R/T is on as long as at least one output relay is energized.

Type of tripping delay = ON-delay ⊠

If the voltage to be monitored exceeds or falls below the set threshold value, output relay R1 (overvoltage) or output relay R2 (undervoltage) de-energizes after the set tripping delay T_v is complete.The LED R/T flashes during timing.

The corresponding output relay re-energizes automatically as soon as the voltage returns to the tolerance range, taking into account a fixed hysteresis of 5 %.

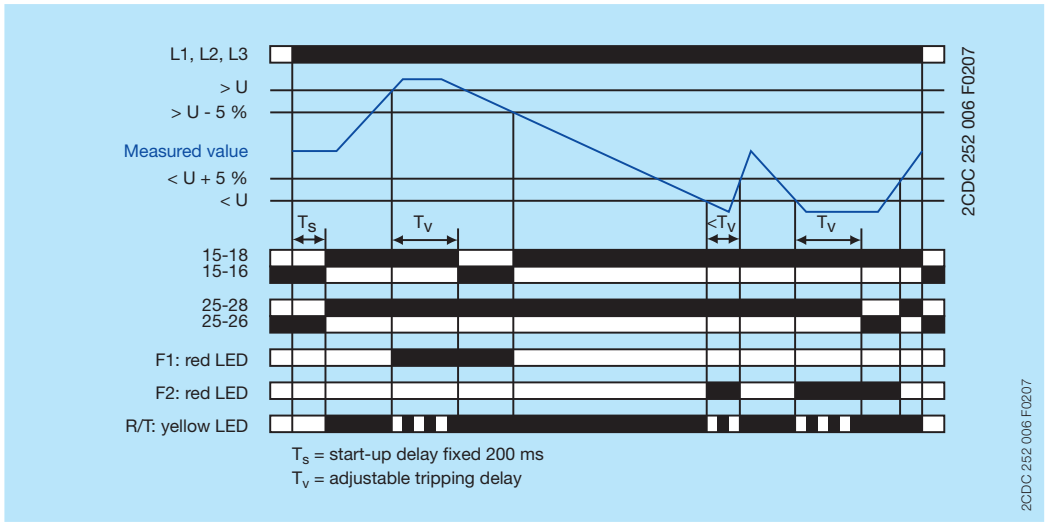

Type of tripping delay = OFF-delay ■

If the voltage to be monitored exceeds or falls below the set threshold value, output relay R1 (overvoltage)

or output relay R2 (undervoltage) de-energizes instantaneously.

As soon as the voltage returns to the tolerance range, taking into account a fixed hysteresis of 5 %, the corresponding output relay re-energizes automatically after the set tripping delay T_v is complete. The LED R/T flashes during timing.

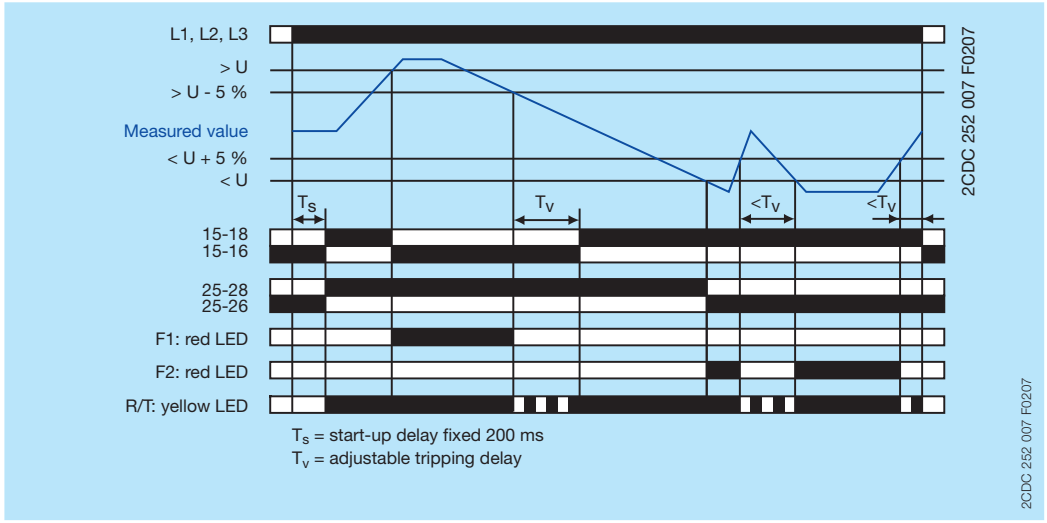

Phase unbalance monitoring

Applying control supply voltage begins the fixed start-up delay T_s. When T_s is complete and all phases are present with correct voltage and with correct phase sequence, the output relays energize and the yellow LED R/T is on.

Type of tripping delay = ON-delay ⊠

If the voltage to be monitored exceeds or falls below the set phase unbalance threshold value, the output relays de-energize after the set tripping delay T_v is complete. The LED R/T flashes during timing and turns off as soon as the output relays de-energize.

The output relays re-energize automatically as soon as the voltage returns to the tolerance range, taking into account a fixed hysteresis of 20 %. The LED R/T is on.

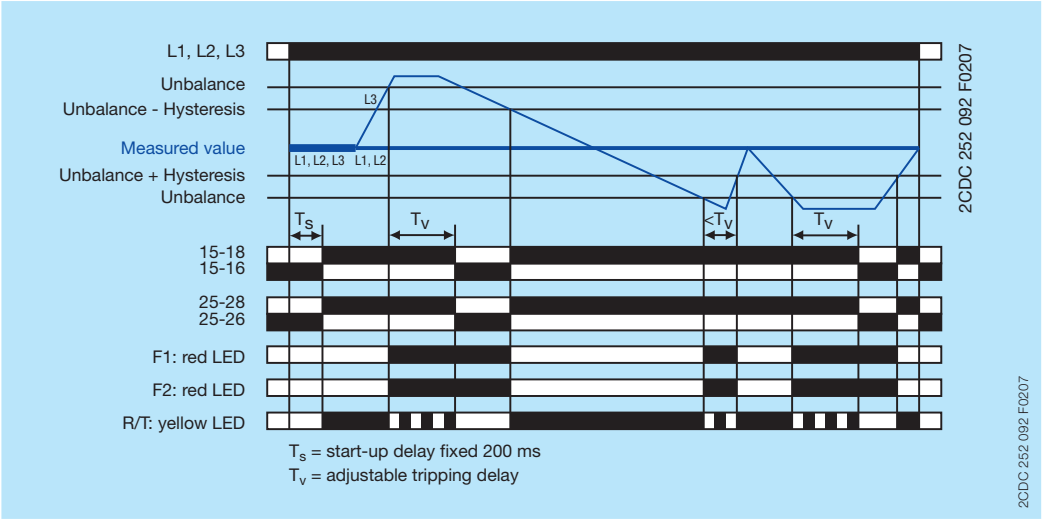

Type of tripping delay = OFF-delay ■

If the voltage to be monitored exceeds or falls below the set phase unbalance threshold value, the output relays de-energize instantaneously and the LED R/T turns off.

As soon as the voltage returns to the tolerance range, taking into account a fixed hysteresis of 20 %, the output relays re-energize automatically after the set tripping delay T_v is complete. The LED R/T flashes during timing and turns steady when timing is complete.

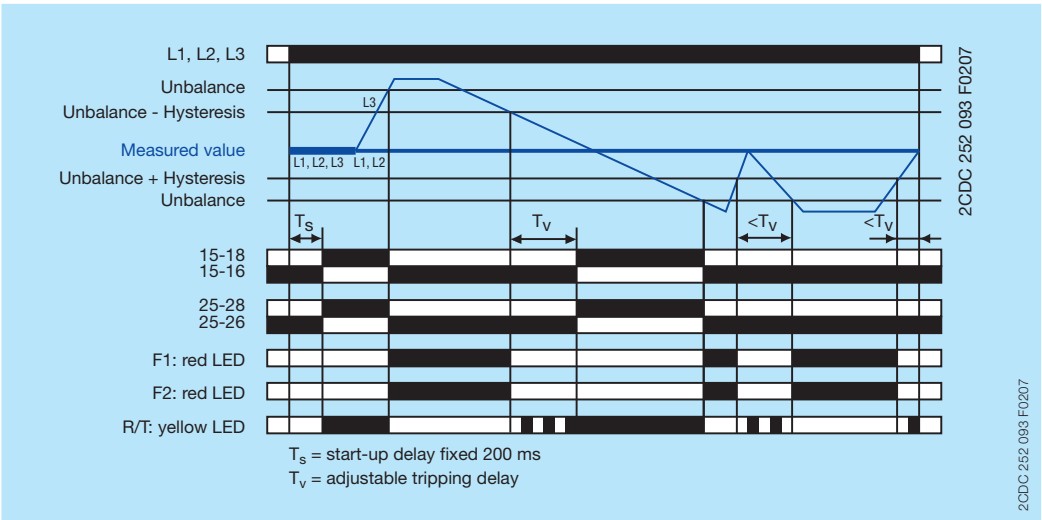

Automatic phase sequence correction

This function can be selected only if phase sequence monitoring is activated (DIP switch 2 = ON) and operating mode 2 x 1 c/o (SPDT) contact is selected (DIP switch 3 = OFF).

Applying control supply voltage begins the fixed start-up delay T_{s1}. When T_{s1} is complete and all phases are present with correct voltage, output relay R1 energizes. Output relay R2 energizes when the fixed start-up delay T_{s2} is complete and all phases are present with correct phase sequence. Output relay R2 remains de-energized if the phase sequence is incorrect.

If the voltage to be monitored exceeds or falls below the set threshold values for phase unbalance, over- or undervoltage or if a phase failure occurs, output relay R1 de-energizes and the LEDs F1 and F2 indicate the fault.

Output relay R2 is responsive only to a false phase sequence. In conjunction with a reversing contactor combination, this enables an automatic correction of the rotation direction. See circuit diagrams.

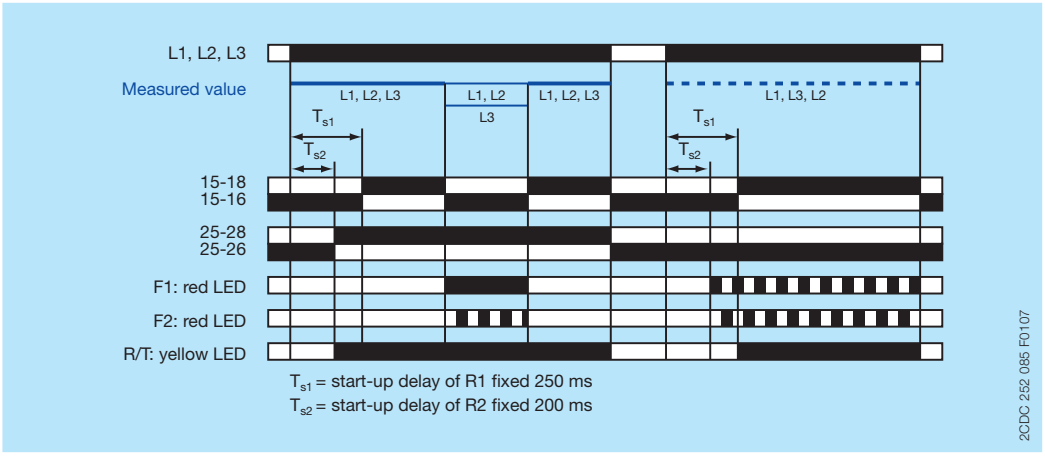

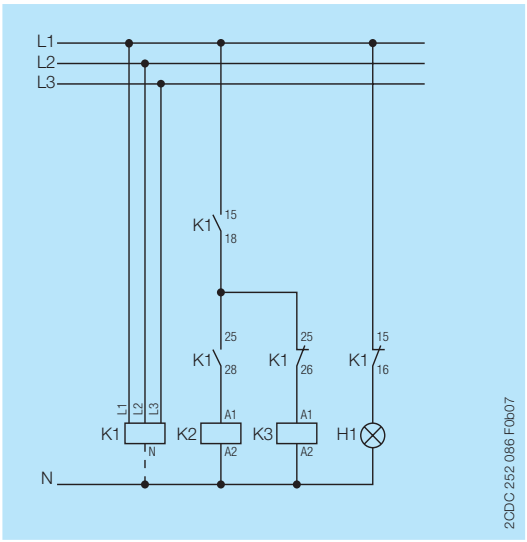

Control circuit diagram (K1 = CM-MPS.x3)

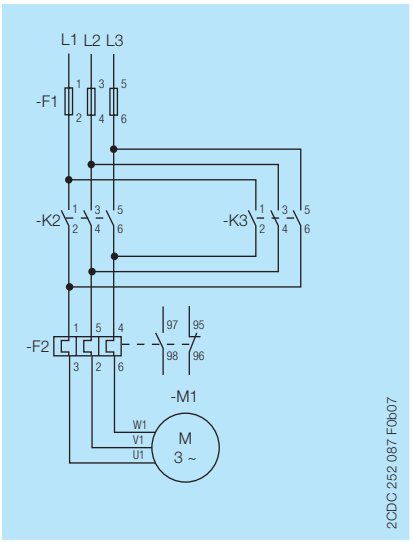

Power circuit diagram

Electrical connection

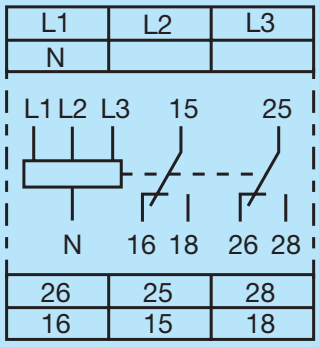

L1, L2, L3, N	Control supply voltage = measuring voltage
15-16/18	Output contacts - closed-circuit principle
25-26/28	

Connection diagram CM-MPS.23

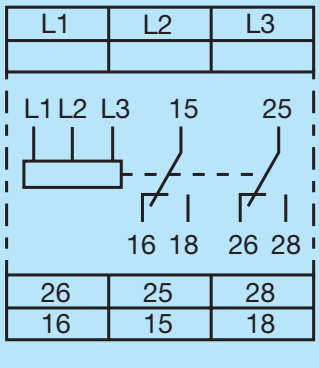

L1, L2, L3	Control supply voltage = measuring voltage
15-16/18	Output contacts - closed-circuit principle
25-26/28	

Connection diagram CM-MPS.43

DIP switches

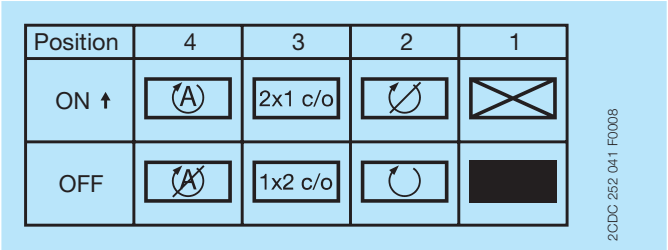

1 Timing function	ON	**ON-delayed ⊠:** In case of a fault, the de-energizing of the output relays and the respective fault message are suppressed for the adjusted tripping delay T_v.
	OFF	**OFF-delayed ■:** In case of a fault, the output relays de-energize instantaneously and a fault message is displayed and stored for the length of the adjusted tripping delay T_v. Thereby, also momentary undervoltage conditions are recognized.
2 Phase sequence monitoring	ON	**Phase sequence monitoring deactivated** ∅ Phase sequence errors will not cause tripping of the relays.
	OFF	**Phase sequence monitoring activated** The output relays de-energize as soon as a phase sequence error occurs. The output relays re-energize automatically as soon as the phase sequence is correct again.
3 Operating principle of the output relays	ON	**2 x 1 c/o (SPDT) contact** 2x1 c/o Depending on the configuration of automatic phase sequence correction and on the fault type, the output relays R1 (15-16/18) and R2 (25-26/28) react differently, if operating principle 2 x 1 c/o (SPDT) contact is selected. *Automatic phase sequence correction deactivated* Ⓐ: • Overvoltage: only 1st c/o (SPDT) contact R1 (15-16/18) switches • Undervoltage: only 2nd c/o (SPDT) contact R2 (25-26/28) switches • Phase unbalance, phase sequence, phase failure, interrupted neutral: both output relays R1 (15-16/18) and R2 (25-26/28) react synchronously *Automatic phase sequence correction activated* Ⓐ: • Overvoltage, undervoltage, phase unbalance, phase failure, interrupted neutral: only 1st c/o (SPDT) contact R1 (15-16/18) switches • Phase sequence: only 2nd c/o (SPDT) contact R2 (25-26/28) switches Operating principle 2 x 1 c/o (SPDT) contact is mandatory if automatic phase sequence correction is activated.
	OFF	**1 x 2 c/o (SPDT) contacts** 1x2 c/o If operating principle 1 x 2 c/o (SPDT) contacts is selected, both output relays R1 (15-16/18) and R2 (25-26/28) react synchronously, independent of the fault type.
4 Automatic phase sequence correction	ON	**Phase sequence correction activated** Ⓐ In conjunction with a reversing contactor combination, it is ensured that the correct phase sequence is applied to the input terminals of the load.
	OFF	**Phase sequence correction deactivated** Ⓐ No automatic phase sequence correction in case of phase sequence error.

Technical data

Data at T_a = 25 °C and rated values, unless otherwise indicated

Input circuit

Type		CM-MPS.23	CM-MPS.43
Supply circuit = measuring circuit		**L1, L2, L3, N**	**L1, L2, L3**
Rated control supply voltage U_s = measuring voltage		3 x 180-280 V AC	3 x 300-500 V AC
Rated control supply voltage U_s tolerance		-15...+10 %	
Rated frequency		50/60/400 Hz	
Frequency range		45-440 Hz	
Typical current / power consumption		5 mA / 4 VA (230 V AC)	5 mA / 4 VA (400 V AC)

Measuring circuit		L1, L2, L3, N	L1, L2, L3
Monitoring functions	Phase failure	■	■
	Phase sequence	can be switched off	can be switched off
	Automatic phase sequence correction	configurable	configurable
	Over-/undervoltage	■	■
	Phase unbalance	■	■
	Interrupted neutral	■	-
Measuring range	Overvoltage	3 x 240-280 V AC	3 x 420-500 V AC
	Undervoltage	3 x 180-220 V AC	3 x 300-380 V AC
	Phase unbalance	2-25 % of average of phase voltages	
Thresholds	Overvoltage	adjustable within measuring range	
	Undervoltage	adjustable within measuring range	
	Phase unbalance (switch-off value)	adjustable within measuring range	
Hysteresis related to the threshold value	Over-/undervoltage	fixed 5 %	
	Phase unbalance	fixed 20 %	
Rated frequency of the measuring signal		50/60/400 Hz	
Frequency range of the measuring signal		45-440 Hz	
Maximum measuring cycle time		100 ms	
Accuracy within the rated control supply voltage tolerance		$\Delta U \leq 0.5$ %	
Accuracy within the temperature range		$\Delta U \leq 0.06$ % / °C	
Measuring method		True RMS	

Timing circuit	
Start-up delay T_s and T_{s2}	fixed 200 ms
Start-up delay T_{s1}	fixed 250 ms
Tripping delay T_v	ON- or OFF-delay 0 s; 0.1-30 s adjustable
Repeat accuracy (constant parameters)	< ±0.2 %
Accuracy within the rated control supply voltage tolerance	$\Delta t \leq 0.5$ %
Accuracy within the temperature range	$\Delta t \leq 0.06$ % / °C

User interface

Indication of operational states		
Relay status / timing	R/T	yellow LED
Fault message	F1	red LED
Fault message	F2	red LED

Details see table ‚LEDs, status information and fault messages' on page 5 and ‚Function descriptions / diagrams' on page 5.

Output circuits

			15-16/18, 25-26/28
Kind of output		15-16/18 25-26/28	relays, 1 x 2 or 2 x 1 (SPDT) contact(s) configurable
Operating principle			closed-circuit principle [1]
Contact material			AgNi alloy, Cd free
Rated operational voltage U_e (IEC/EN 60947-1)			250 V
Minimum switching voltage / Minimum switchting current			24 V / 10 mA
Maximum switchting voltage / Maximum switching current			see load limit curves
Rated operational current I_e (IEC/EN 60947-5-1)		AC12 (resistive) at 230 V	4 A
		AC15 (inductive) at 230 V	3 A
		DC12 (resistive) at 24 V	4 A
		DC13 (inductive) at 24 V	2 A
AC rating (UL 508)		Utilization category (Control Circuit Rating Code)	B 300
		max. rated operational voltage	300 V AC
		max. continuous thermal current at B 300	5 A
		max. making/breaking apparent power at B 300	3600/360 VA
Mechanical lifetime			30 x 10^6 switching cycles
Electrical lifetime		AC12, 230 V, 4 A	0.1 x 10^6 switching cycles
Maximum fuse rating to achieve short-circuit protection		n/c contact	6 A fast-acting
		n/o contact	10 A fast-acting

General data

MTBF			on request	
Duty time			100 %	
Dimensions (W x H x D)		product dimensions	22.5 x 85.6 x 103.7 mm (0.89 x 3.37 x 4.08 in)	
		packaging dimensions	97 x 109 x 30 mm (3.82 x 4.29 x 1.18 in)	
Weight			**Screw connection technology**	**Easy Connect Technology (push-in)**
	net weight	CM-MPS.23	0.149 kg (0.328 lb)	0.138 kg (0.304 lb)
		CM-MPS.43	0.148 kg (0.327 lb)	0.137 kg (0.302 lb)
	gross weight	CM-MPS.23	0.174 kg (0.384 lb)	0.163 kg (0.359 lb)
		CM-MPS.43	0.173 kg (0.381 lb)	0.162 kg (0.357 lb)
Mounting			DIN rail (IEC/EN 60715), snap-on mounting without any tool	
Mounting position			any	
Minimum distance to other units			not necessary	
Material of housing			UL 94 V-0	
Degree of protection		housing	IP50	
		terminals	IP20	

[1] Closed-circuit principle: Output relay(s) de-energize(s) if measured value exceeds or falls below the adjusted threshold value.

Electrical connection

		Screw connection technology	Easy Connect Technology (Push-in)
Wire size	fine-strand with(out) wire end ferrule	1 x 0.5-2.5 mm² (1 x 20-14 AWG) 2 x 0.5-1.5 mm² (2 x 20-16 AWG)	2 x 0.5-1.5 mm² (2 x 20-16 AWG)
	rigid	1 x 0.5-4 mm² (1 x 20-12 AWG) 2 x 0.5-2.5 mm² (2 x 20-14 AWG)	2 x 0.5-1.5 mm² (2 x 20-16 AWG)
Stripping length		8 mm (0.32 in)	
Tightening torque		0.6 - 0.8 Nm (5.31 - 7.08 lb.in)	-

Environmental data

Ambient temperature ranges	operation	-25...+60 °C
	storage	-40...+85 °C
Damp heat, cyclic (IEC/EN 60068-2-30)		55 °C, 6 cycles
Climatic category		3K3
Vibration, sinusoidal (IEC/EN 60255-21-1)		Class 2
Shock (IEC/EN 60255-21-2)		Class 2

Isolation data

Type		
Rated insulation voltage U_i	input circuit / output circuit	600 V
	output circuit 1 / output circuit 2	300 V
Rated impulse withstand voltage U_{imp} (IEC/EN 60664)	input circuit	6 kV, 1.2/50 µs
	output circuit	4 kV, 1.2/50 µs
Test voltage between all isolated circuits (routine test)		2.5 kV, 50 Hz, 1 s
Basic insulation	input circuit / output circuit	600 V
Protective separation (IEC/EN 61140, EN 50178)	input circuit / output circuit	-
Pollution degree (IEC/EN 60664, IEC/EN 60255-5)		3
Overvoltage category (IEC/EN 60664, IEC/EN 60255-5)		III

Standards

Product standard	IEC/EN 60255-6, EN 50178
Low Voltage Directive	2006/95/EC
EMC directive	2004/108/EC
RoHS directive	2002/95/EC

Electromagnetic compatibility

Type		CM-MPS.23	CM-MPS.43
Interference immunity to		IEC/EN 61000-6-1, IEC/EN 61000-6-2	
electrostatic discharge	IEC/EN 61000-4-2	Level 3 (6 kV / 8 kV)	
radiated, radio-frequency, electromagnetic field	IEC/EN 61000-4-3	Level 3 (10 V/m)	
electrical fast transient / burst	IEC/EN 61000-4-4	Level 3 (2 kV / 2 kHz)	
surge	IEC/EN 61000-4-5	Level 4 (2 kV L-N)	Level 4 (2 kV L-L)
conducted disturbances, induced by radio-frequency fields	IEC/EN 61000-4-6	Level 3 (10 V)	
harmonics and interharmonics	IEC/EN 61000-4-13	Class 3	
Interference emission		IEC/EN 61000-6-3, IEC/EN 61000-6-4	
high-frequency radiated	IEC/CISPR 22, EN 55022	Class B	
high-frequency conducted	IEC/CISPR 22, EN 55022	Class B	

Technical diagrams

Load limit curves

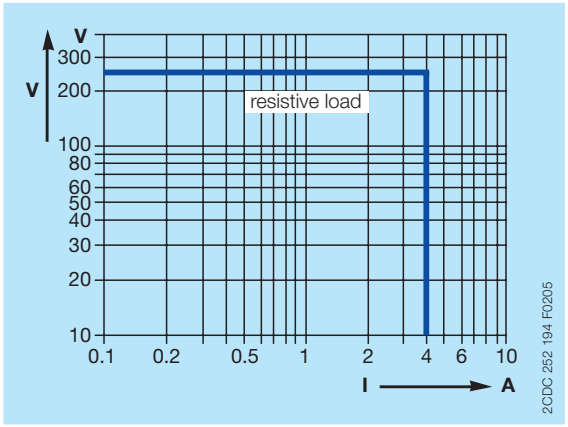

AC load (resistive)

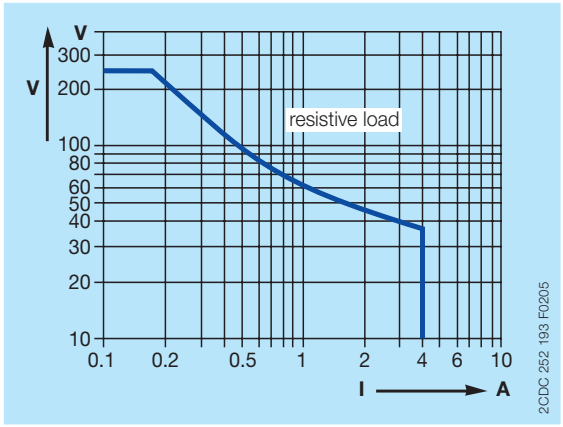

DC load (resistive)

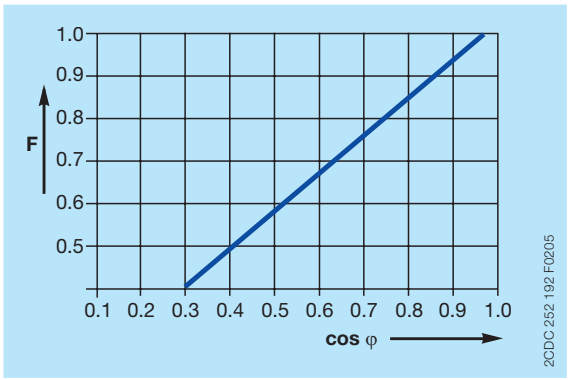

Derating factor F for inductive AC load

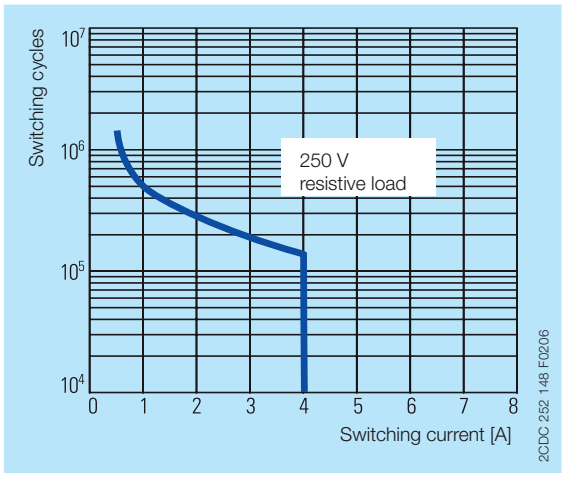

Contact lifetime

Dimensions

in **mm** and *inches*

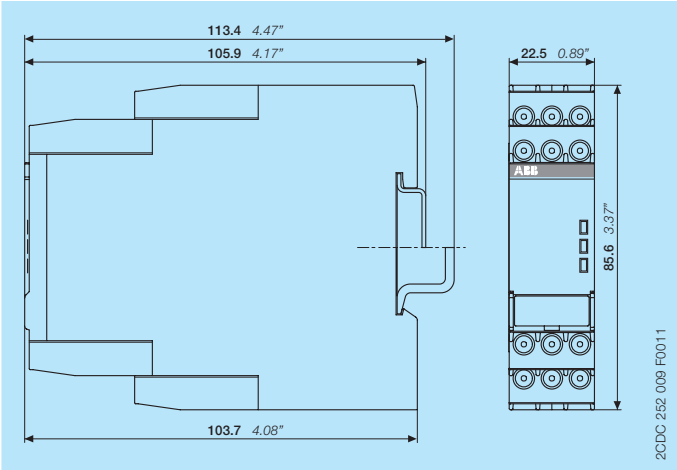

Accessories

in **mm** and *inches*

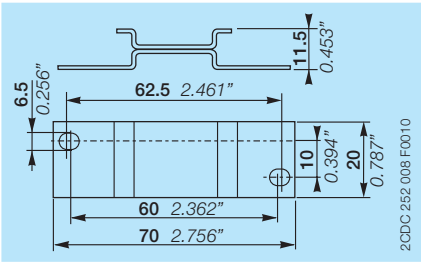

ADP.01 - Adapter for screw mounting

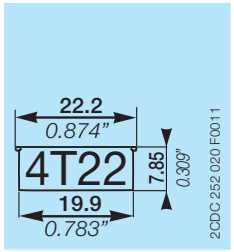

MAR.12 - Marker label for devices with DIP switches

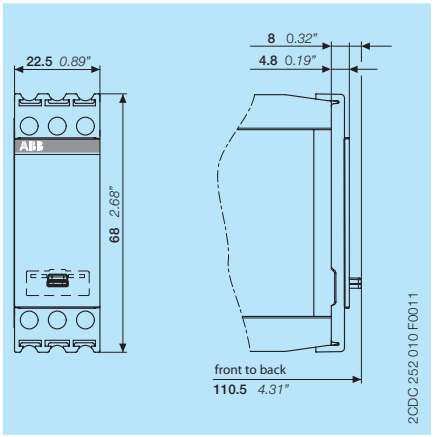

COV.11 - Sealable transparent cover

Further documentation

Document title	Document type	Document number
Electronic products and relays	Technical catalogue	2CDC 110 004 C02xx
CM-MPS.23, CM-MPS.43, CM-MPN.52, CM-MPN.62, CM-MPN.72	Instruction manual	1SVC 730 530 M0000

You can find the documentation on the internet at www.abb.com/lowvoltage -> Control Products -> Electronic Relays and Controls -> Three Phase Monitors.

Contact us

ABB STOTZ-KONTAKT GmbH
P. O. Box 10 16 80
69006 Heidelberg, Germany
Phone: +49 (0) 6221 7 01-0
Fax: +49 (0) 6221 7 01-13 25
E-mail: info.desto@de.abb.com

You can find the address of your
local sales organisation on the
ABB home page
http://www.abb.com/contacts
-> Low Voltage Products and Systems

Document number 2CDC 112 176 D0201 (11.2012)

Note:
We reserve the right to make technical changes or modify the contents of this document without prior notice. With regard to purchase orders, the agreed particulars shall prevail. ABB AG does not accept any responsibility whatsoever for potential errors or possible lack of information in this document.

We reserve all rights in this document and in the subject matter and illustrations contained therein. Any reproduction, disclosure to third parties or utilization of its contents – in whole or in parts – is forbidden without prior written consent of ABB AG.

Copyright© 2012 ABB
All rights reserved