

612 NGH

INDEX

1 General 3

2 Mechanics 3

2.1 General 3
2.2 Connections 3

3 Operating Data 4

3.1 Operating Data - Electrical Interface - Input 4
3.2 Electrical Operating Data 5
3.3 Operating Data - Electrical Interface -Output 5
3.4 Electrical Features 6
3.5 Aerodynamic 7
3.6 Sound Data 8

4 Environment 8

4.1 General 8
4.2 Climatic requirements*) 8

5 Safety 9

5.1 Electrical Safety 9
5.2 Approval Tests 9

6 Reliability 9

6.1 General 9

1 General

Fan type	Fan	
Rotational direction looking at rotor	clockwise	
Airflow direction	Air outlet over struts	
Bearing system	Sleeve bearing	
Mounting position	any	

2 Mechanics

2.1 General

Width	60,0 mm	
Height	60,0 mm	
Depth	25,0 mm	
Weight	0,066 kg	
Housing material	Plastic	
Impeller material	Plastic	
Max. torque when mounted across both mounting flanges Screw size	wire outlet corner: 20 Ncm remaining corners: 40 Ncm ISO 4762 - M3 degreased, without an additional brace and without washer	

2.2 Connections

Electrical connection	Wires	
Length of lead wire Tolerance	L = 310 mm +- 10,0 mm	
Wire gauge (AWG)	22	
Insulation diameter	1,70 mm	

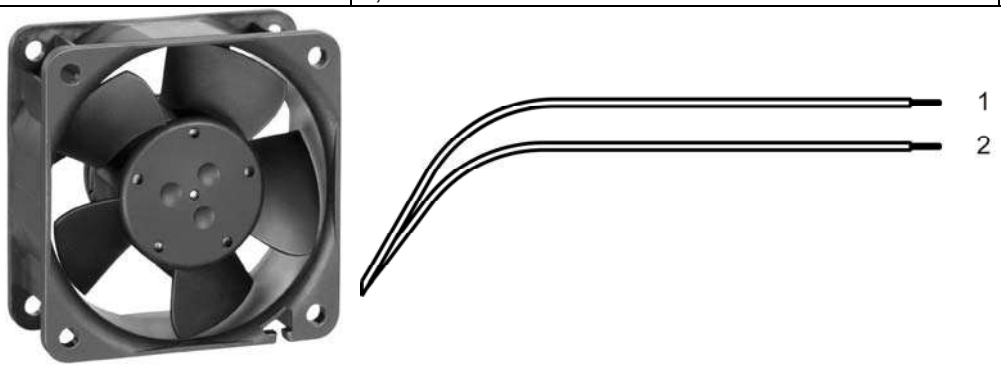

	Colour	Operation
Wire 1	red	+ UB
Wire 2	blue	- GND

3 Operating Data

3.1 Operating Data - Electrical Interface - Input

Control input	None

3.2 Electrical Operating Data

Measurement conditions: Normal air density = 1,2 kg/m3; Temperature 23°C +/- 3°C; Motor axis horizontal;warm-up time before measuring 5 minutes (unless otherwise specified).In the intake and outlet area should not be any solid obstruction within 0,5 m.

$\Delta p = 0$: corresp. to free air flow (see section 3.5)
I: corresp. to arithm. mean current value

Features	Condition	Symbol	Values		
Voltage range	$\Delta p = 0$	U	8,0 V		15,0 V
Nominal voltage	$\Delta p = 0$	U_N		12,0 V	
Power consumption Tolerance	$\Delta p = 0$ 0001	P	1,0 W +- 17,5 %	2,4 W +- 12,5 %	4,0 W +- 17,5 %
Current consumption Tolerance	$\Delta p = 0$ 0001	I	125 mA +- 17,5 %	200 mA +- 12,5 %	260 mA +- 17,5 %
Speed Tolerance	$\Delta p = 0$ 0001	n	3.560 1/min +- 15,0 %	5.600 1/min +- 10,0 %	7.090 1/min +- 15,0 %
Starting current consumption				1.170 mA	

3.3 Operating Data - Electrical Interface -Output

Tacho type	None

Alarm type	None

3.4 Electrical Features

Electronic function	None	
Reversed polarity protection Max. residual current at Un	Rectifying diode IF <= 5 uA	
Locked rotor protection	Auto restart	
Locked rotor current at Un	approx. 1.170 mA	
Clock signal t3/t4 at locked rotor	Typical: 0,2 s / 1,1 s t3: 0,06 s... 0,77 s t4: 0,3 s... 3,6 s	

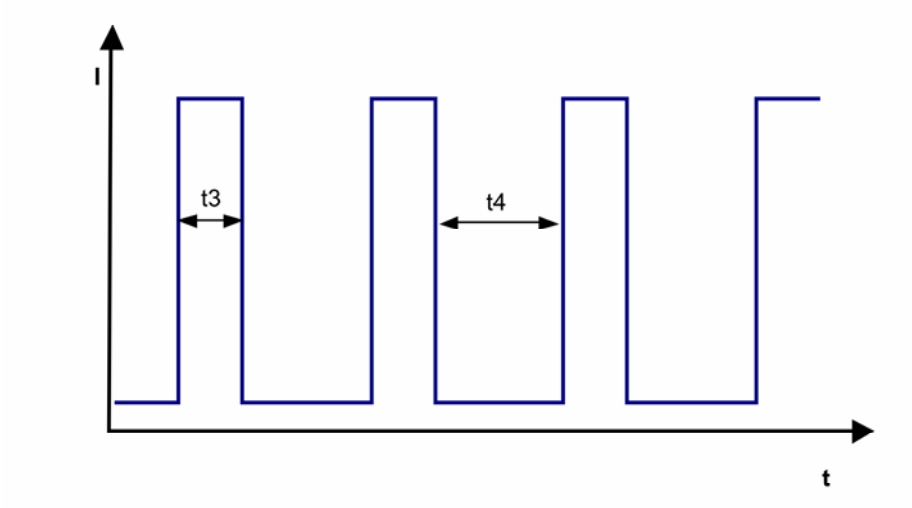

3.5 Aerodynamic

Measurement conditions:	Measured with a double chamber intake rig acc. to DIN EN ISO 5801. Normal air density = 1,2 kg/m3; Temperature 23°C +/- 3°C; In the intake and outlet area should not be any solid obstruction within 0,5 m. The information is only valid under the specified test conditions and may be changed by the installation conditions. If there are deviations from the standard test conditions, the characteristic values must be checked under the installed conditions.

a.) Operation condition:

5.600 1/min at free air flow

Max. free-air flow (Δp = 0 / $\dot{V}$ = max.)	43,0 m3/h	
Max. static pressure (Δp = max. / $\dot{V}$ =0)	90 Pa	

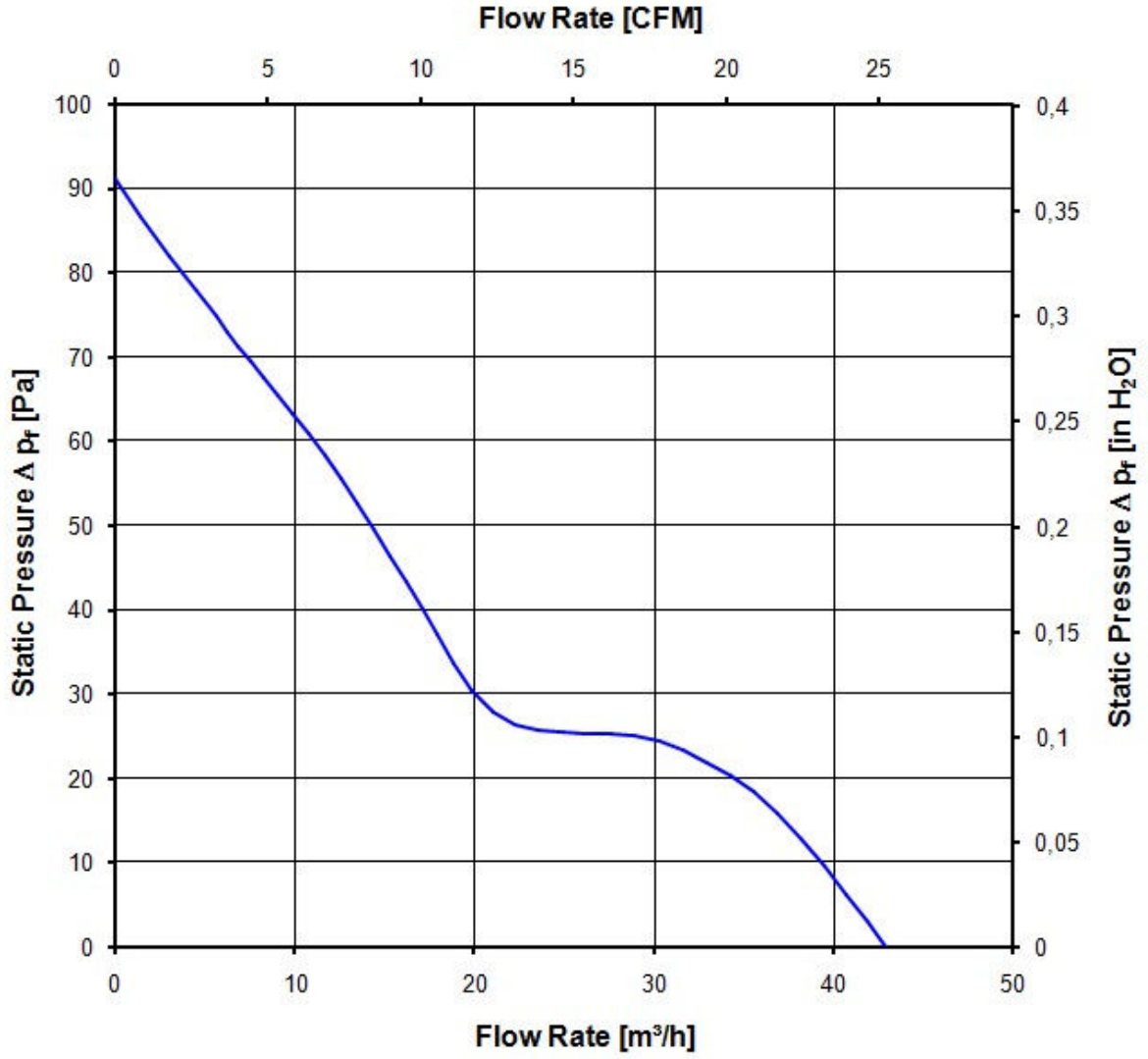

3.6 Sound Data

Measurement conditions:	Sound pressure level: 1 Meter distance between microphone and the air intake. Sound power level: Acc. to DIN 45635 part 38 (ISO 10302) Measured in a semianchoic chamber with a background noise level of Lp(A) < 5 dB(A) For further measurement conditions see section 3.5

a.) Operation condition:

5.600 1/min at free air flow

Optimal operating point	32,0 m3/h @ 20 Pa	
Sound power level at the optimal operating point	5,2 bel(A)	
Sound pressure level at free air flow, measured in rubber bands	37,0 dB(A)	

4 Environment

4.1 General

Min. permitted ambient temperature TU min.	-20 °C	
Max. permitted ambient temperature TU max.	70 °C	
Min. permitted storage temperature TL min.	-40 °C	
Max. permitted storage temperature TL max.	80 °C	

4.2 Climatic requirements*)

Humidity requirements	humid heat, constant; according to DIN EN 60068-2-78, 14 days	
Water exposure	None	
Dust requirements	None	
Salt fog requirements	None	

*) Permittet application area:
The product is intended for use in sheltered rooms with controlled temperature and controlled humidity. Directly exposure to water must be avoided.

Pollution degree 1 (according DIN EN 60664-1)
There is either no pollution or it occurs only dry, non-conductive pollution. The pollution has no negative impact.

5 Safety

5.1 Electrical Safety

Dielectric strength DIN EN 60950 (VDE 0805) and DIN EN 60335 (VDE 0700) A.) Type test Measuring conditions: After 48h of storage at 95% R.H. and 25°C. No arcing or breakdown is allowed! All connections together to ground. B.) Routine test Measuring conditions: At indoor climate. No arcing or breakdown is allowed! All connections together to ground.	Not applicable Not applicable	
Isolation resistance Measuring conditions: After 48h of storage at 95% R.H. and 25°C measured with U=500 VDC for 1 min.	RI > 10 MOhm	
clearance / creepage distance	1,0 mm / 1,2 mm	
Protection class	III	

5.2 Approval Tests

CE	EC Declaration of Conformity	Yes
EAC	Eurasian Conformity	Yes
UL	Underwriters Laboratories	Yes / UL507, Electric Fans
VDE	Association for Electrical, Electronic and Information Technologies	Yes / Approval acc. to EN 60950 (VDE 0805) - Information technology equipment
CSA	Canadian Standards Association	Yes / C22.2 No. 113 Fans and Ventilators
CCC	China Compulsory Certification	No

The approval tests are observed to:
U approval max.:15,0 V @ TU approval max.: 70,0 °C

6 Reliability

6.1 General

Life expectancy L10 at TU = 40 °C	70.000 h	
Life expectancy L10 at TU = 60 °C	44.000 h	
Life expectancy L10 at TU max.	35.000 h	
Life expectancy L10 Delta (40 °C)	140.000 h	

Copying of this document, and giving it to others and the use or communication of the contents thereof, are forbidden without express authority. Offenders are liable to the payment of damages. All rights are reserved in the event of the grant of a patent or the registration of a utility model or design.

Schutzvermerk nach DIN ISO 16016 beachten/
Refer to protection notice DIN ISO 16016!

Anzahl und Länge der Litze s. Spezifikation
length and number of wires see design specification

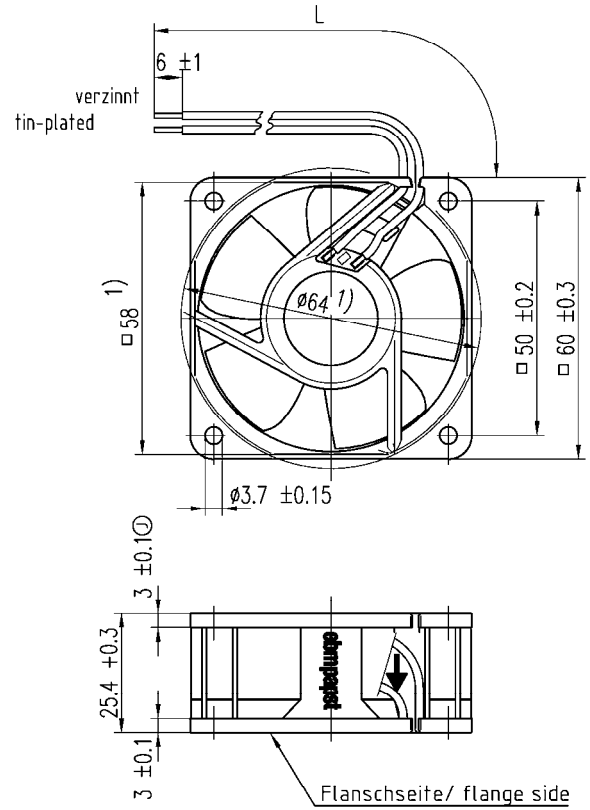

1) Maße für Montagewand
1) dimensions for assembly wall

Ⓙ

			ebmpapst	Werkstoff/Material:		Volumen/Volume (mm^3):
SAP-Status/State	Aend.-Nr./Change-No.	AutoCAD-System-Version	CAD-Umgebung/ CAD-Environment			Gewicht/Mass (g):
		Datum/Date	Name/Name			
		Bearb./ Drawn		Artikel/Title		
Tolerierung/Tolerances:		Gepr./ Checked				
		Freig./ Release				
Allgemeintoleranzen/Gen. tolerances:		ebmpapst		Zchg.-Nr./ Drawing.-No.:		Ers.f.Zchg./ Replaces:
		ebm-papst St. Georgen GmbH & Co. KG		Dokumenttyp/Type of Document	Teildokument (Blatt/Page) Index/Index	Format/Size: Massstab/scale

11/09