EVPS 12 BK

Pressure compensation unit, polyamide



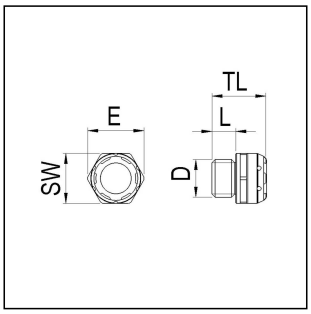

Products may differ in size, colour and appearance to those shown. If you require further information or customisation, please contact us directly.

RoHS

Material cable gland	Polyamide
Material membrane	ePTFE
Material sealing gasket	TPE
Airflow at 70mbar	22 LH
Temp. range min	-40 °C
Temp. range max	100 °C
Protection class	IP69, IP66 / IP68
Thread type	M
Ø Connection thread D	12
Lead	1,5
Length screw-in thread L	8 mm
Key width SW	16 mm
Collar diameter (E)	18 mm
Tightening torque	1 N/m
Total length TL	17,4 mm
Product Color	RAL 9005
Order no. RAL 9005	10102370
Type	EVPS 12 BK
Packing unit	10
EAN number	4007685048736
Tariff number	39269097
ETIM-Classification	EC000441

Your Contact:
WISKA UK Ltd.
Unit 7, Hurling Way · St. Columb Major Business Park · TR9 6SX, St. Columb Major, Cornwall · Great Britain
☎ +44-12-08816062 · 🖷 +44-12-08816708
info@wiska.co.uk · www.wiska.co.uk

Other technical data on request / subject to change without notice

Recommended accessories

EMUG 12 BK	10061780

08.10.2026

Your Contact:
WISKA UK Ltd.
Unit 7, Hurling Way · St. Columb Major Business Park · TR9 6SX, St. Columb Major, Cornwall · Great Britain
☎ +44-12-08816062 · 🖷 +44-12-08816708
info@wiska.co.uk · www.wiska.co.uk

Other technical data on request / subject to change without notice

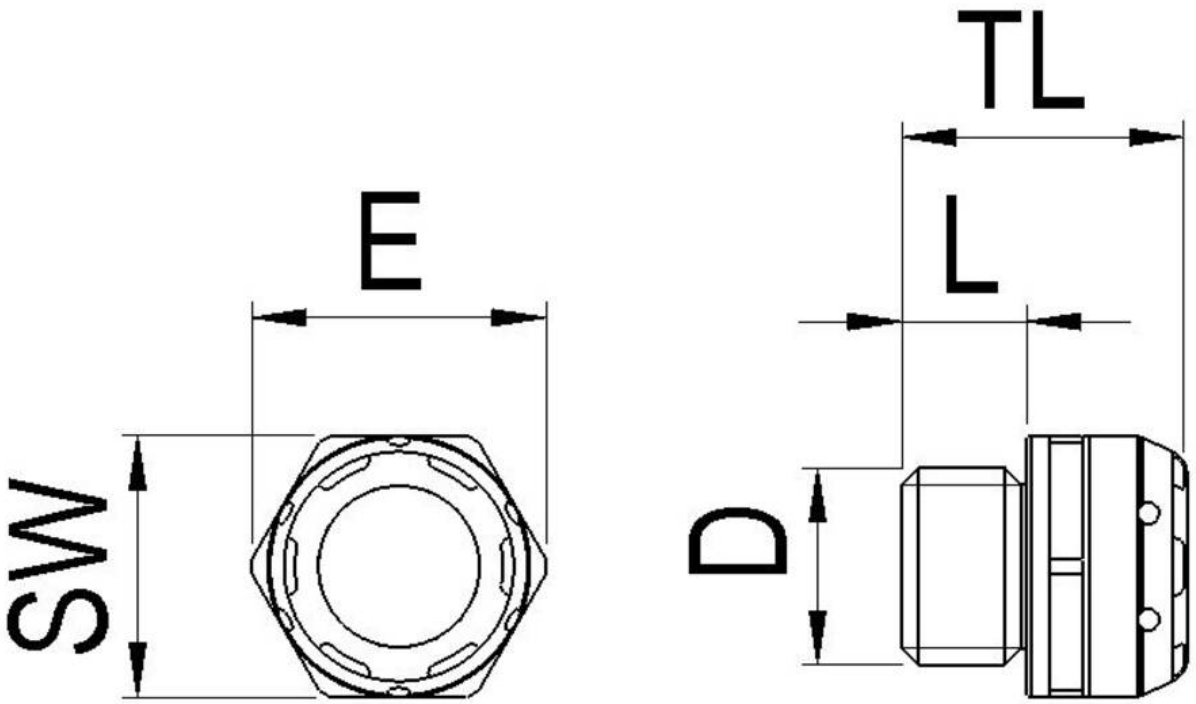

Your Contact:
WISKA UK Ltd.
Unit 7, Hurling Way · St. Columb Major Business Park · TR9 6SX, St. Columb Major, Cornwall · Great Britain
☎ +44-12-08816062 · 🖷 +44-12-08816708
info@wiska.co.uk · www.wiska.co.uk

Other technical data on request / subject to change without notice