

Single-circuit metering, measurement & analysis

DIRIS A20

Multifunction meters - PMD

multi-measurement meter - dimensions 96 x 96 mm



DIRIS A20

The solution for

- Industry
- Infrastructure
- Data centre



Strong points

- Easy to use
- Compliant with IEC 61557-12
- Detects wiring errors

Conformity to standards

- IEC 61557-12
- IEC 62053-22 class 0.5S
- IEC 62053-23 class 2
- UL

Management software

- To get the most effective use from your Socomec measurement and metering devices, we offer a range of dedicated software tools.

See page 618.

Function

DIRIS A20 are panel mounted measurement units which ensure the user has access to all the measurements required for successfully carrying out energy efficiency projects and ensuring the electrical distribution is monitored.

All this information can be analysed remotely using an energy management software solution.

Principle diagram

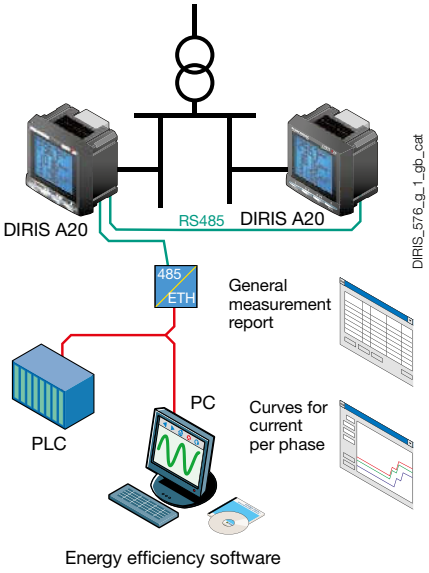

Advantages

Easy to use

Thanks to its large backlit LCD display and its multiple viewing screens with direct pushbutton access, DIRIS A20 provide clear readings and are easy to use.

They directly display a number of multi-measurement and metering values : + kWh, + kvarh, I, U, V, F, P, Q, S, PF, etc.

Compliant with IEC 61557-12

IEC 61557-12 is a high-level standard for all PMDs (Performance Monitoring Devices) that are designed to measure and monitor electrical parameters in distribution networks.

Compliance with IEC 61557-12 ensures a high level of equipment performance, in terms of metrology, and the mechanical and environmental aspects (EMC, temperature, etc.).

Detects wiring errors

An integrated test function can be utilised to detect incorrect wiring and to automatically correct CT installation errors.

Functions

Multi-measurement

- Currents
  - instantaneous: I1, I2, I3, In
  - maximum average: I1, I2, I3, In
- Voltages & frequency
  - instantaneous: V1, V2, V3, U12, U23, U31, F
- Power
  - instantaneous: 3P, ΣP, 3Q, ΣQ, 3S, ΣS
  - maximum average: ΣP, ΣQ, ΣS
- Power factors
  - instantaneous: 3PF, Σ

Metering

- Active energy: + kWh
- Reactive energy: + kvarh
- Hours:

Harmonic analysis

- Total harmonic distortion (level 51)
  - Currents: thd I1, thd I2, thd I3
  - Phase-to-neutral voltage: thd V1, thd V2, thd V3
  - Phase-to-phase voltage: thd U12, thd U23, thd U31

Events

Alarms on all electrical values

Communications(1)

RS485 with MODBUS protocol

Output

- Remote command of device
- Alarm report
- Pulse report

Inputs

- Remote status device

(1) Available as an option (see the following pages).

socomec Innovative Power Solutions

Front panel



1. Backlit LCD display.
2. Direct access key for currents (instantaneous and max. values), current THD and test function.
3. Direct access key for voltages, frequency and voltage THD.
4. Pushbutton for active, reactive, and apparent power (instantaneous and max. values) and power factor.
5. Direct access key for energies, hour meter and programming menu.

Case

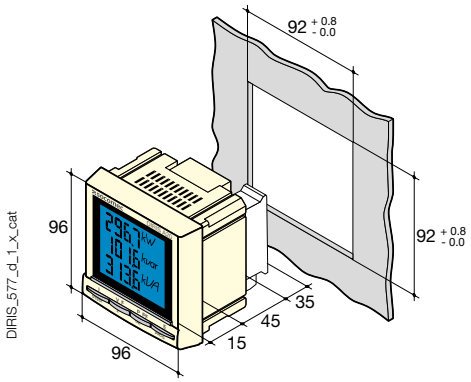

Type	panel mounting
Dimensions W x H x D	96 x 96 x 60 mm
Case degree of protection	IP30
Front degree of protection	IP52
Display type	backlit LCD display
Terminal block type	Fixed or plug-in
Voltage and other connection cross-section	0.2 … 2.5 mm^2
Current connection cross-section	0.5 … 6 mm^2
Weight	400 g

Plug-in modules

DIRIS® A20





1 Output

1 output assignable to:
- Pulses: configurable (type, weight, duration) in kWh or kvarh.
- Monitoring: 3I, In, 3V, 3U, F, ΣP, ΣQ, ΣS, ΣPFL/C, THD 3I, THD 3V, THD 3U and timer.
- Remote command of device.



Communication

RS485 link with JBUS / MODBUS protocol (speed up to 38400 bauds)



3 inputs, 1 output

3 inputs assignable to:
- Remote status device.

1 output assignable to:
- Pulses: configurable (type, weight, duration) in kWh or kvarh.
- Monitoring: 3I, In, 3V, 3U, F, ΣP, ΣQ, ΣS, ΣPFL/C, THD 3I, THD 3V, THD 3U and timer.
- Remote command of device.

Accessories

Current transformers
(See page 584)

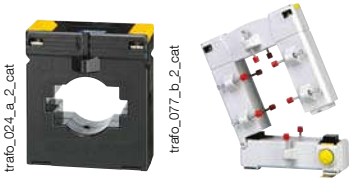

IP65 protection



Panel mounting kit for a 144 x 96 mm cut-out



DIRIS A20

Multifunction meters - PMD

multi-measurement meter - dimensions 96 x 96 mm

Electrical characteristics

Current measurement (TRMS)	
Via CT primary	9 999 A
Via CT secondary	5 A
Measurement range	0 … 11 kA
Input consumption	0.6 VA
Measurement updating period	1 s
Accuracy	0.2 %
Permanent overload	6 A
Intermittent overload	10 I_n for 1 s
Voltage measurements (TRMS)	
Direct measurement between phases	50 … 500 VAC
Direct measurement between phase and neutral	28 … 289 VAC
Input consumption	≤ 0.1 VA
Measurement updating period	1 s
Accuracy	0.2 %
Permanent overload	800 VAC
Power measurement	
Measurement updating period	1 s
Accuracy	0.5 %
Power factor measurement	
Measurement updating period	1 s
Accuracy	0.5 %
Frequency measurement	
Measurement range	45 … 65 Hz
Measurement updating period	1 s
Accuracy	0.1 %

Energy accuracy	
Active (according to IEC 62053-22)	Class 0.5 S
Reactive (according to IEC 62053-23)	Class 2
Auxiliary power supply	
Alternating voltage	110 … 400 VAC
AC tolerance	± 10 %
Direct voltage	120 … 350 VDC
DC tolerance	± 20 %
Frequency	50 / 60 Hz
Consumption	10 VA
Pulse or alarm output	
Number	1
Type	100 VDC - 0.5 A - 10 VA
Max. number of operations	≤ 10^8
Inputs	
Number	3
Power supply	10 … 30 VDC
Minimum signal width	10 ms
Minimum duration between 2 pulses	18 ms
Type	Phototransistors
Communication	
Link	RS485
Type	2 … 3 half duplex wires
Protocol	MODBUS RTU
MODBUS® speed	1400 … 38400 bauds
Operating conditions	
Operating temperature	- 10 … + 55 °C
Storage temperature	- 20 … + 85 °C
Relative humidity	95 %

Terminals

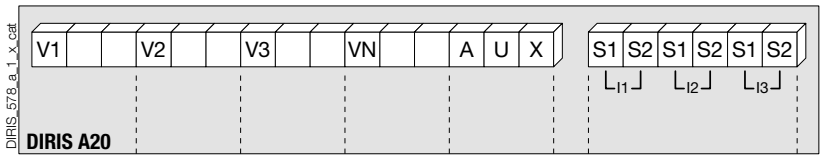

S1 - S2: current inputs.

AUX: auxiliary power supply U_s.
V1, V2, V3 & VN: voltage inputs.

Communication module

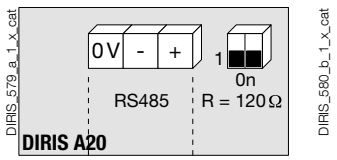

RS485 link.
R = 120 Ω: selectable internal resistance for RS485 end of line termination.

Output or alarm module

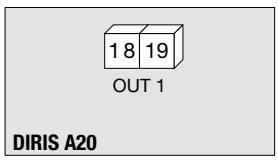

18 - 19: output n°1

3 inputs, 1 output module

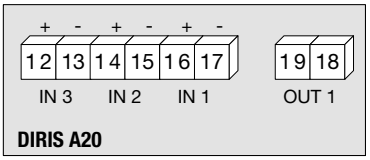

Connection

Recommendation:

- For IT earthing systems, it is recommended that the CT secondary is not connected to earth.
- When disconnecting the DIRIS, the secondary of each current transformer must be short-circuited. This operation can be carried out automatically by a SOCOMEC PTI, an accessory which is included in this catalogue. Please consult us.

Low voltage balanced network

3/4 wires with 1 CT

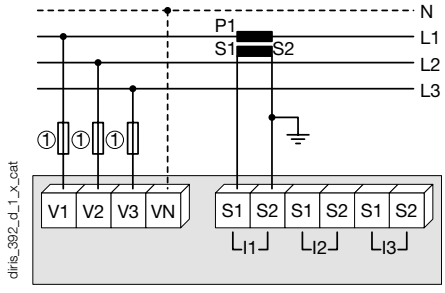

Use of 1 CT reduces by 0.5% the accuracy of the phases, the current of which is worked out by vector calculation.
1. Fuses 0.5 A gG / 0.5 A class CC.

Single-phase

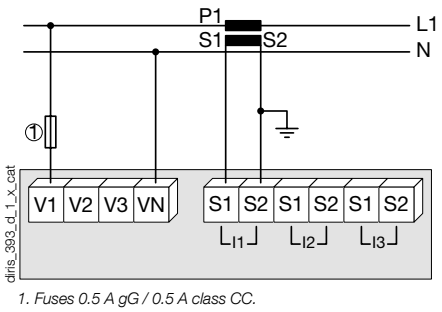

1. Fuses 0.5 A gG / 0.5 A class CC.

Two-phase

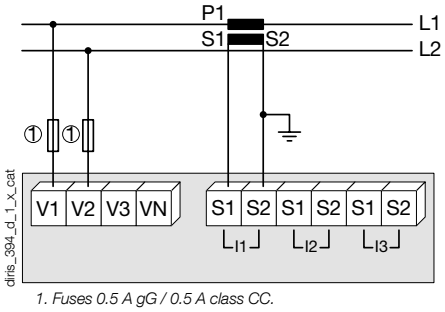

1. Fuses 0.5 A gG / 0.5 A class CC.

socomec Innovative Power Solutions

Low voltage unbalanced network

3/4 wires with 3 CTs

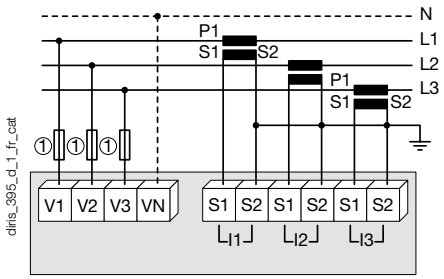

1. Fuses 0.5 A gG / 0.5 A class CC.

3 wires with 2 CTs

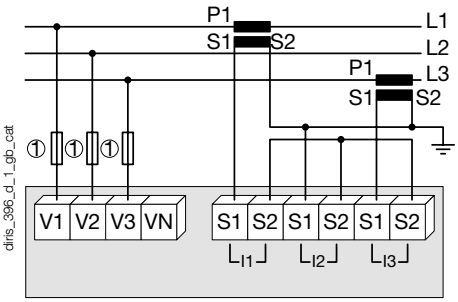

Use of 2 CTs reduces by 0.5% the accuracy of the phases, the current of which is worked out by vector calculation.

1. Fuses 0.5 A gG / 0.5 A class CC.

3 wires with 2 CTs

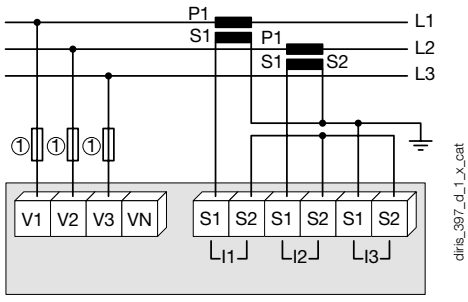

Use of 2 CTs reduces by 0.5% the accuracy of the phases, the current of which is worked out by vector calculation.

1. Fuses 0.5 A gG / 0.5 A class CC.

Additional information

Communication via RS485 link

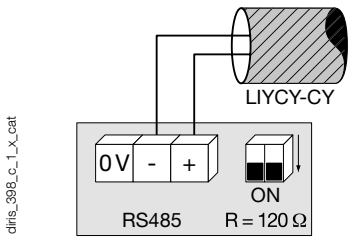

AC & DC auxiliary power supply

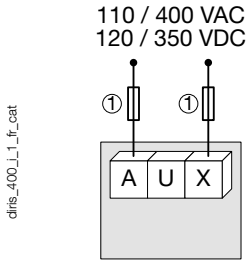

1. Fuses 0.5 A gG / 0.5 A class CC.

References

Basic device **Auxiliary power supply U_s**		**DIRIS A20** **Reference**
110 … 400 VAC / 120 … 350 VDC		4825 **0200**
Optional plug-in modules		**Reference**
1 output		4825 **0080**
RS485 MODBUS® communication		4825 **0082**
3 inputs, 1 output		4825 **0083**
Accessories		
Description of accessories	**To be ordered in multiples of**	**Reference**
IP65 protection	1	4825 **0089**
Panel mounting kit for a 144 x 96 mm cut-out	1	4825 **0088**
Fuse disconnect switches for the protection of voltage inputs (type RM) 3 poles	4	5601 **0018**
Fuse disconnect switches for the protection of the auxiliary supply (type RM) 1 pole + neutral	6	5601 **0017**
Fuse type gG 10x38 0.5 A	10	6012 **0000**
Ferrite to be associated with communication modules	1	4899 **0011**
Current transformer range	1	See page 584
Management software for DIRIS		See page 618

Expert Services

> Study, definition, advice, implementation, maintenance and training… Our experts “Expert Services” offer complete support for the success of your project.

