O6S400

Through-beam sensor transmitter

O6S-OOKG/AS/4P

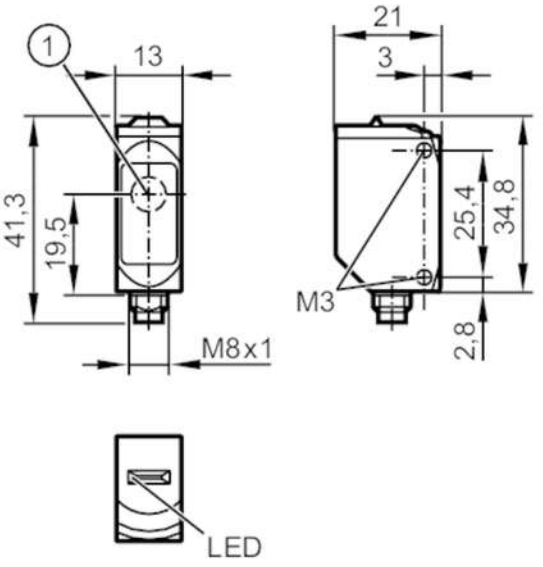

1: light emission

Product characteristics		
Type of light		red light
Housing		rectangular
Application		
Function principle		Through-beam sensor
Application		suited for use in the machine tool industry
Electrical data		
Operating voltage	[V]	10...30 DC
Current consumption	[mA]	11; ((24 V))
Protection class		III
Type of light		red light
Wave length	[nm]	633
Detection zone		
Transmitter / receiver		transmitter
Range	[m]	< 10
Max. light spot diameter	[mm]	300
Light spot dimensions refer to		at maximum range
Operating conditions		
Ambient temperature	[°C]	-25...60
Protection		IP 65; IP 67; IP 68
Tests / approvals		
EMC		EN 60947-5-2
MTTF	[years]	2942
UL approval		UL Approval no. E002

O6S400

Through-beam sensor transmitter

O6S-OOKG/AS/4P

Mechanical data		
Weight	[g]	33.7
Housing		rectangular
Dimensions	[mm]	34.8 x 13 x 21
Materials		housing: stainless steel (316L/1.4404); plastics: PPSU; Sealing: FKM
Lens material		PMMA
Lens alignment		side lens
Tightening torque	[Nm]	1; (screws)

Displays / operating elements		
Display	operation	1 x LED, green

Remarks	
Remarks	operating voltage "supply class 2" according to cULus
Pack quantity	1 pcs.

Electrical connection

Connector: 1 x M8; coding: A

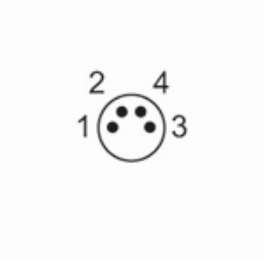

Connection

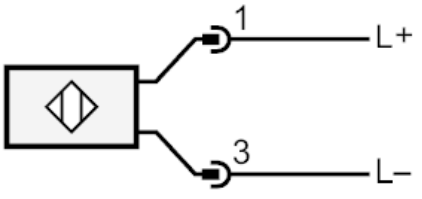

O6S400

Through-beam sensor transmitter

O6S-OOKG/AS/4P

Diagrams and graphs

excess gain graph

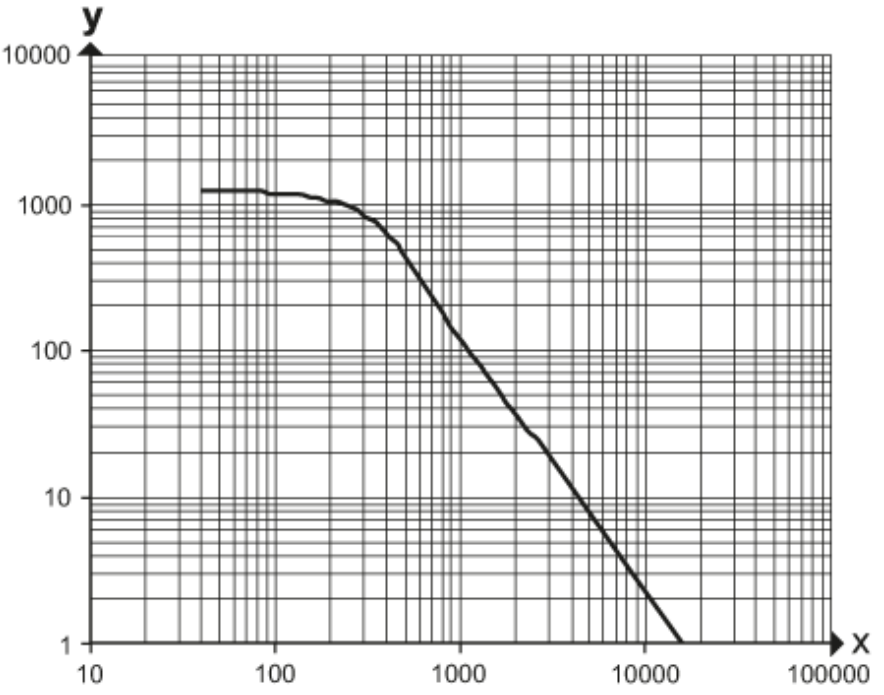

x: distance [mm]

y: excess gain factor