

NH Fuse System

DIN 57 636/VDE 0636 Parts 1, 10, 21, 22, 201
IEC 60269-2
DIN 43 620 Parts 1 to 4 (Standard dimensions)

The utilization category is identified by two letters, the first indicating the **operational class** and the second the **object to be protected**. The Lindner range includes fuse-links to DIN VDE 0636 standard for the following utilization categories:

gL: general purpose cable and line protection
aM: backup switchgear and controlgear protection
gTr: general purpose transformer protection
gR: general purpose, fast acting
aR: partial purpose, fast acting

Classification

The NH system is classed among plug-in fuse systems and is comprised of:
- fuse-base, (possibly including terminal covers and phase barriers)
- fuse-link with blade contact
- fuse-link replacement device (LV HRC fuse puller)

Since the design of this system cannot guarantee non-interchangeability of rated current, it must be handled by a qualified professional.

Approval symbols

Germany
Austria
Switzerland
Netherlands

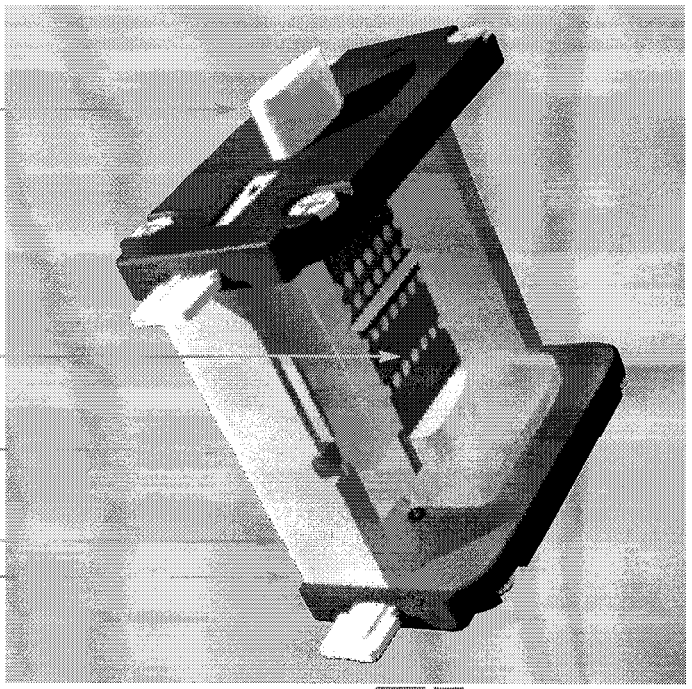

General Purpose Fuses

NH Fuses

500V gL-gG

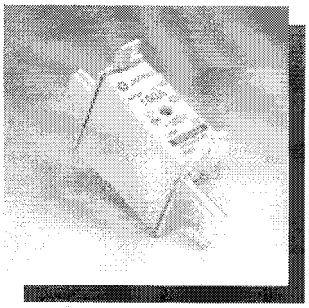

NH-ZERO
Fuse-links
~500 V gL-gG
with voltage-conducting grip lug, combination recognition signal, contact blades, complying with DIN VDE 0636 part 201

Cd/Pb-free

SIZE	RATED In CURRENT (A)	POWER LOSSES In (W)	CATALOG NUMBER	REFERENCE NUMBER	PACK.
000/C00	2	3,9	1B613.000000	B211946	9
	4	1,5	1B619.000000	M212462	9
	6	1,6	1B623.000000	D213995	9
	10	1,1	1B631.000000	B219651	9
	16	1,8	1B635.000000	K222097	9
	20	2,4	1B637.000000	A222847	9
	25	2,4	1B639.000000	E201185	9
	32	2,7	1B643.000000	Z211438	9
	35	3,0	1B645.000000	C211947	9
	40	3,4	1B647.000000	N212463	9
	50	3,9	1B651.000000	T212974	9
	63	4,7	1B655.000000	E213996	9
	80	5,7	1B659.000000	Y216543	9
	100	6,7	1B663.000000	B219122	9
00	125	8,4	1B765.000000	R201863	3
	160	10,6	1B769.000000	P211084	3
0	6	1,8	1B023.000000	H213148	3
	10	1,5	1B031.000000	G214159	3
	16	2,5	1B035.000000	Q215179	3
	20	3,5	1B037.000000	R215686	3
	25	3,5	1B039.000000	Y216198	3
	32	3,2	1B043.000000	W216702	3
	35	3,5	1B045.000000	J217220	3
	40	4,2	1B047.000000	P217731	3
	50	5,1	1B051.000000	Z218246	3
	63	6,2	1B055.000000	N218765	3
	80	7,1	1B059.000000	C219284	3
	100	8,7	1B063.000000	D219814	3
	125	11,0	1B065.000000	P222492	3
	160	11,7	1B069.000000	F223013	3
	200		08000.200700*	Q215524*	1
	224		08000.224700*	V219645*	1
	250		08000.250700*	F222093*	1
1	16	2,5	1B135.000000	M200801	3
	20	3,5	1B137.000000	C201344	3
	25	3,3	1B139.000000	N201860	3
	32	3,2	1B143.000000	L211081	3
	35	3,5	1B145.000000	A211600	3
	40	4,2	1B147.000000	Y212633	3
	50	5,1	1B151.000000	B213648	3
	63	6,2	1B155.000000	L214669	3
	80	7,1	1B159.000000	S215687	3
	100	8,7	1B163.000000	X216703	3
	125	11,0	1B165.000000	Q217732	3
	160	11,7	1B169.000000	A218247	3
	200	14,5	1B171.000000	P218766	3
	224	15,9	1B173.000000	D219285	3
	250	19,7	1B175.000000	E219815	3
2	35	3,5	1B245.000000	P201861	3
	50	5,1	1B251.000000	B211601	3
	63	6,0	1B255.000000	Z212634	3
	80	7,1	1B259.000000	C213649	3
	100	8,6	1B263.000000	M214670	3
	125	10,6	1B265.000000	T215688	3
	160	11,9	1B269.000000	Y216704	3
	200	14,0	1B271.000000	R217733	3
	224	15,4	1B273.000000	Q218767	3
	250	19,1	1B275.000000	R222494	3
	300	22,5	1B277.000000	P200803	3
	315	24,0	1B279.000000	E201346	3
	350	26,2	1B281.000000	Q201862	3
	400	30,2	1B283.000000	N211083	3

* Previous design with frontal indicator

Characteristic curves, see page 97
Dimensions, see page 101

General Purpose Fuses

NH Fuses

Melting time - current data

Size 000 with 4/4a, gl-gG, ~ 400 V, ~ 500 V, ~ 690 V

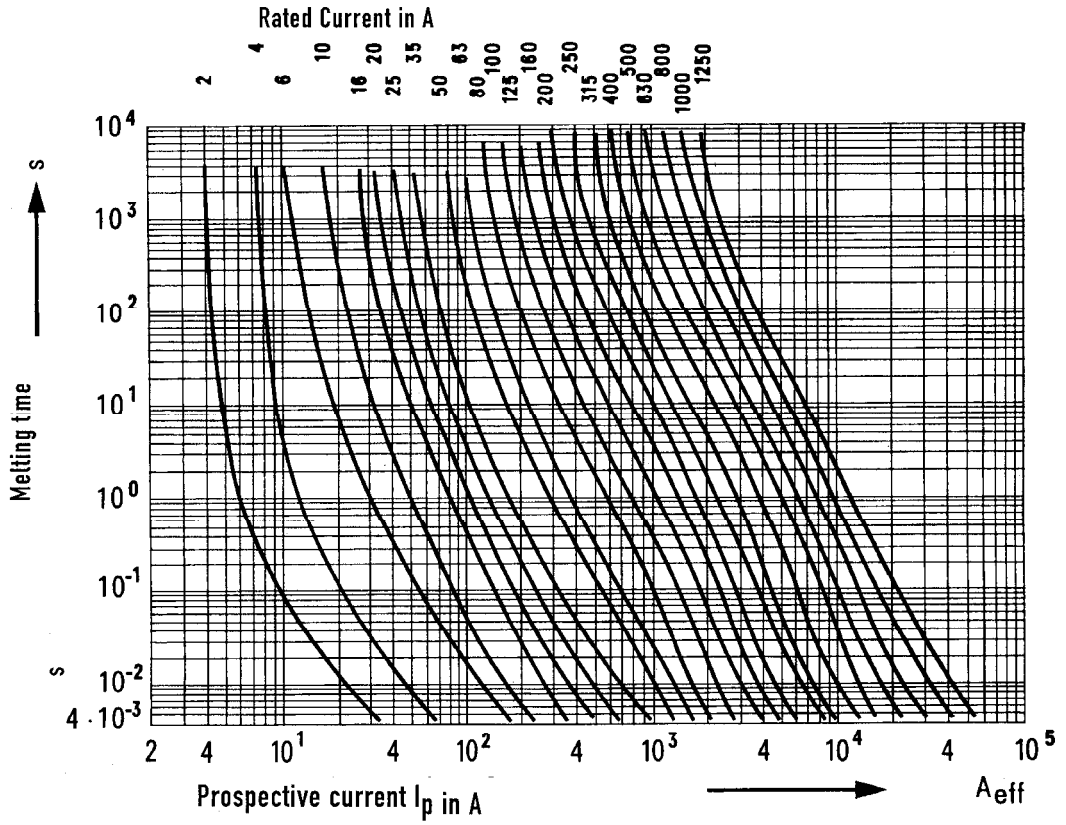

Peak let-thru current data

Size 000 with 4/4a, gL-gG, ~ 400 V, ~ 500 V, ~ 690 V

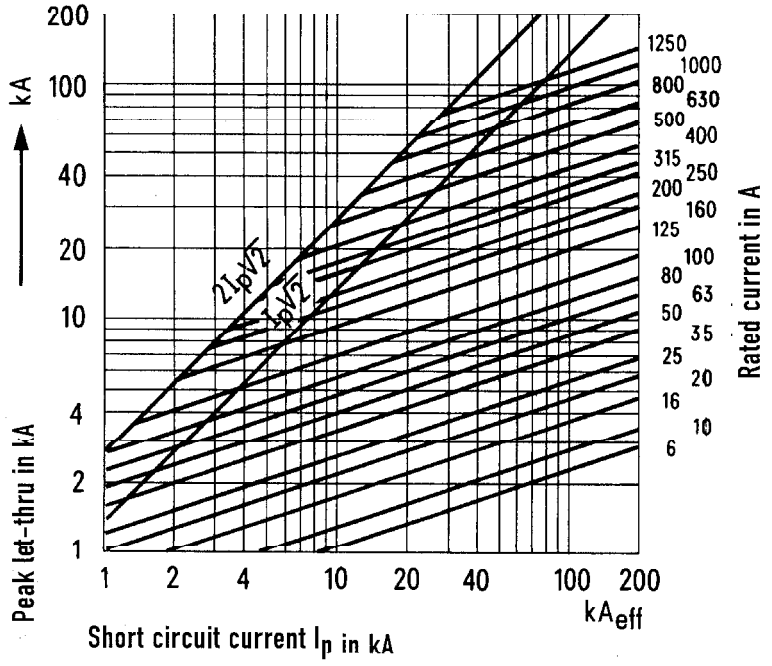

Ferraz Shawmut

General Purpose Fuses

NH Fuses

500-690V gL-gG

NH Fuse-links

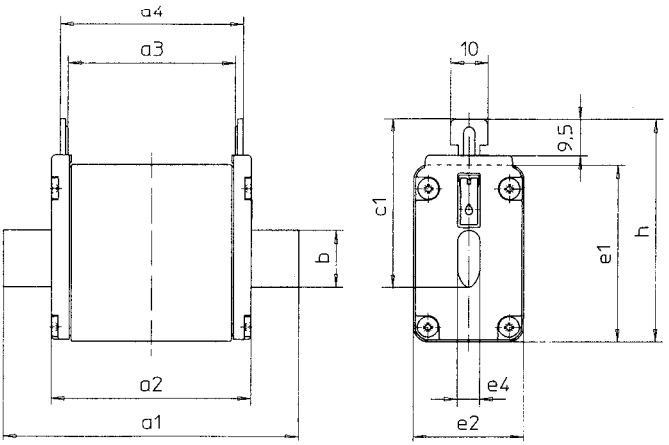

	RATED In CURRENT (A)	a1	a2	a3	a4	b	c1	e1	e2	e4	h
Standard 500 V and 400 V gL-gG with voltage-conducting grid lug (page 86/87, 89)											
SIZE 000	2-100A	79	52	45,5	49,5	15	35	40,5	20,8	6	52,5
SIZE 00	125/160A	79	52,8	45	50	15	35	47,5	29,5	6	59,5
SIZE 0	6-160A	125	66,8	61	66	15	35	47,5	29,5	6	59,5
SIZE 1	16-100A	135	70,8	63	68	15	40	47,5	29,5	6	64,5
SIZE 1	125-250A	135	70,8	63	68	20	40	52,5	39,5	6	64,5
SIZE 2	35-250A	150	72,3	63	68	20	48	52,5	39,5	6	72,5
SIZE 2	300-400A	150	72,3	63	68	26	48	60	51	6	72
SIZE 3	250-400A	150	72,3	63	68	26	60	60	51	6	83,5
SIZE 3	425-630A	150	72,3	63	68	33	60	74	70	6	86
SIZE 4	400-1250A	200	85	64	68	33	85	104	89	8	97
SIZE 4a	500-1250A	200	86	90	68	33	85	104	89	8	97
Standard 500 V and 400 V gL-gG (SGL version) with voltage-free grid lug (page 88, 90)											
SIZE 000	2-100A	78	53,4	45,7	49,7	15	35	40,5	20,8	6	52,5
SIZE 00	125/160A	79	53,5	44,8	49	15	35	47,5	29,5	6	59,5
SIZE 0	6-160A	125	67,5	62,5	66,7	15	35	47,5	29,5	6	59,5
SIZE 1	16-100A	135	71,5	62,8	67	15	40	47,5	29,5	6	64,5
SIZE 1	125-250A	135	73,4	63	67,2	20	40	52,5	39,5	6	64,5
SIZE 2	35-250A	150	73,4	63	67,2	20	48	52,5	39,5	6	72,5
SIZE 2	300-400A	150	73,4	63	67,2	26	48	60	51	6	72
SIZE 3	250-400A	150	73,4	63	68	26	60	60	51	6	83,5
SIZE 3	425-630A	150	73,4	63	68	33	60	74	70	6	86

General Purpose Fuses

NH Fuses

500-690V gL-gG

Size	Rated current in A	a_1	a_2	a_3	a_4	b	c_1	e_1	e_2	e_4	h
NH 690 V gL-gG with voltage-conducting grip lug (page 91)											
SIZE 000	2-35A	79	53,8	45	49	15	35,8	40	20	6	47,8
SIZE 00	40-100A	79	53,8	45	49	15	35,8	48	30	6	47,8
SIZE 1	16-160A	135	75	64	68	20	40	44	30	6	52
SIZE 1	200A	135	75	64	68	20	40	47	39	6	52
SIZE 2	35-100A	150	75	64	68	26	48	44	30	6	60
SIZE 2	125-315A	150	75	64	68	26	60	47	39	6	72
SIZE 3	250/300A	150	75	64	68	26	60	47	39	6	72
SIZE 3	315-425A	150	75	64	68	33	60	58	51	6	72
SIZE 3	500A	150	75	64	68	33	60	70	64	6	72
SIZE 4	400-800A	200	85	64	68	33	85	104	89	8	97
SIZE 4a	400-800A	200	85	86	90	33	85	104	89	6	97
NH 690 V gL-gG with voltage-free grip lug (page 92)											
SIZE 000	2-35A	79	53,8	45	49	15	35,8	40,5	21	6	47,8
SIZE 00	40-125A	79	53,8	45	49	15	35,8	40,5	30	6	47,8
SIZE 1	35-200A	135	75	64	68	20	40	51	39	6	52
SIZE 2	32-250A	150	75	64	68	26	48	51	39	6	60
SIZE 2	300/315A	150	75	64	68	26	48	60	46	6	60
NH 500 V aM with voltage-conducting grip lug (page 94)											
SIZE 000	2-80A	79	53,8	45	49	15	35,8	40,5	21	6	47,8
SIZE 00	100-160A	79	53,8	45	49	15	35,8	40,5	30	6	47,8
SIZE 0	6-160A	125	68	64	68	15	35,8	44	30	6	47,8
SIZE 1	16-125A	135	75	64	68	20	40	44,5	30	6	52
SIZE 1	160-250A	135	75	64	68	20	40	47	39	6	52
SIZE 2	32-100A	150	75	64	68	26	48	44	30	6	60
SIZE 2	160/200A	150	75	64	68	26	48	47	39	6	60
SIZE 2	224/250A	150	75	64	68	26	60	56	44	6	72
SIZE 2	315-400A	150	75	64	68	26	48	47	39	6	60
SIZE 3	315-630A	150	75	64	68	33	60	58	51	6	72
SIZE 4	315-1250A	200	85	64	68	33	85	104	89	8	97
NH 690 V aM with voltage-conducting grip lug (page 95)											
SIZE 00	6-160A	78	50	44	50	15	35	44	28	6	54
SIZE 1	50-315A	135	67	61	67	20	40	55	40	6	65
SIZE 2	63-500A	150	67	61	67	26	48	62,5	56	6	72,5
SIZE 3	315-630A	150	67	61	67	32	60	76	69	6	86
NH 400 V gTr with voltage-conducting grip lug (page 96)											
SIZE 2	100-250kVA	150	75	64	68	26	48	47	39	6	60
SIZE 3	100-630kVA	150	75	64	68	33	60	58	51	6	72
SIZE 4a	100-800kVA	200	85	86	90	33	85	104	89	6	97

Dimensions in mm