Model 3265 & 3266
Standard Banana Plug with #6-32 or #8-32 Screw



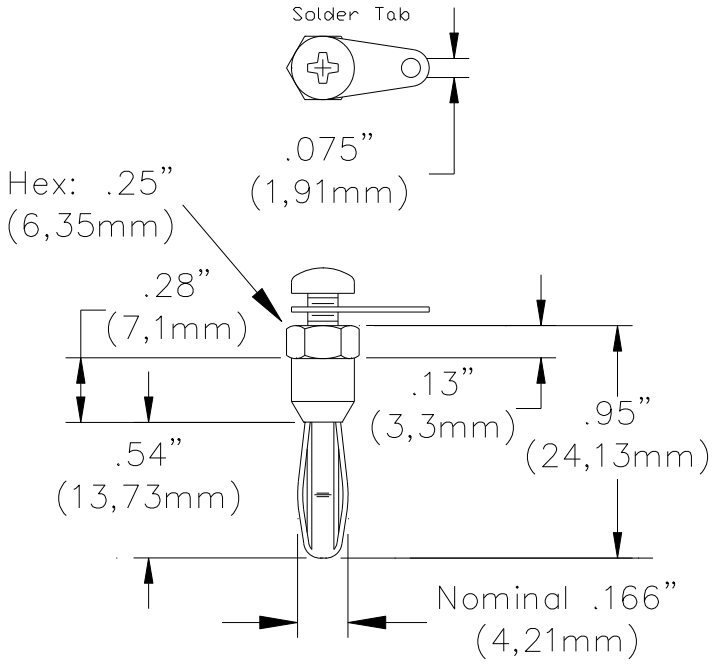

FEATURES:

✓ Fits standard banana jack

MATERIALS:

Banana Plug Body: Brass, Alloy 360, ½ Hard
Spring: Beryllium Copper, Berylco 25, Cond. H.T.
Finish: Nickel plated per QQ-N-290, Class 2, 200/300 microinches
Screw: Model 3265 - 6-32 x .25" (6,35mm) Pan head, Phillips, steel, nickel plated
Model 3266 – 8-32 x 25" (6,35mm) Pan head, Phillips, steel, nickel plated.
Solder Lug: Copper per QQ-C-576
Finish: Electro tin plated

RATINGS:

Voltage: Hands free testing in controlled voltage environments: 500 Vrms Max. *For CE compliance*: not intended for hand-held use at voltages above 33 Vrms/70 Vdc.
Current: 15 Amps

ORDERING INFORMATION:

Model with 6-32 screw: 3265
Model with 8-32 screw: 3266
Sold in package of 10

All dimensions are in inches. Tolerances (except noted): .xx = ±.02" (,51 mm), .xxx = ± .005" (,127 mm).
All specifications are to the latest revisions. Specifications are subject to change without notice.
Registered trademarks are the property of their respective companies.

Sales: 800-490-2361 Fax: 888-403-3360 Technical Support: 800-241-2060 (technicalsupport@pomonatest.com)
For "Where to Buy" information, visit the Pomona web site at www.pomonaelectronics.com

Rev: 100
D1093996, D1093997