IE5267

Inductive sensor

IEB3001-BPKG RT

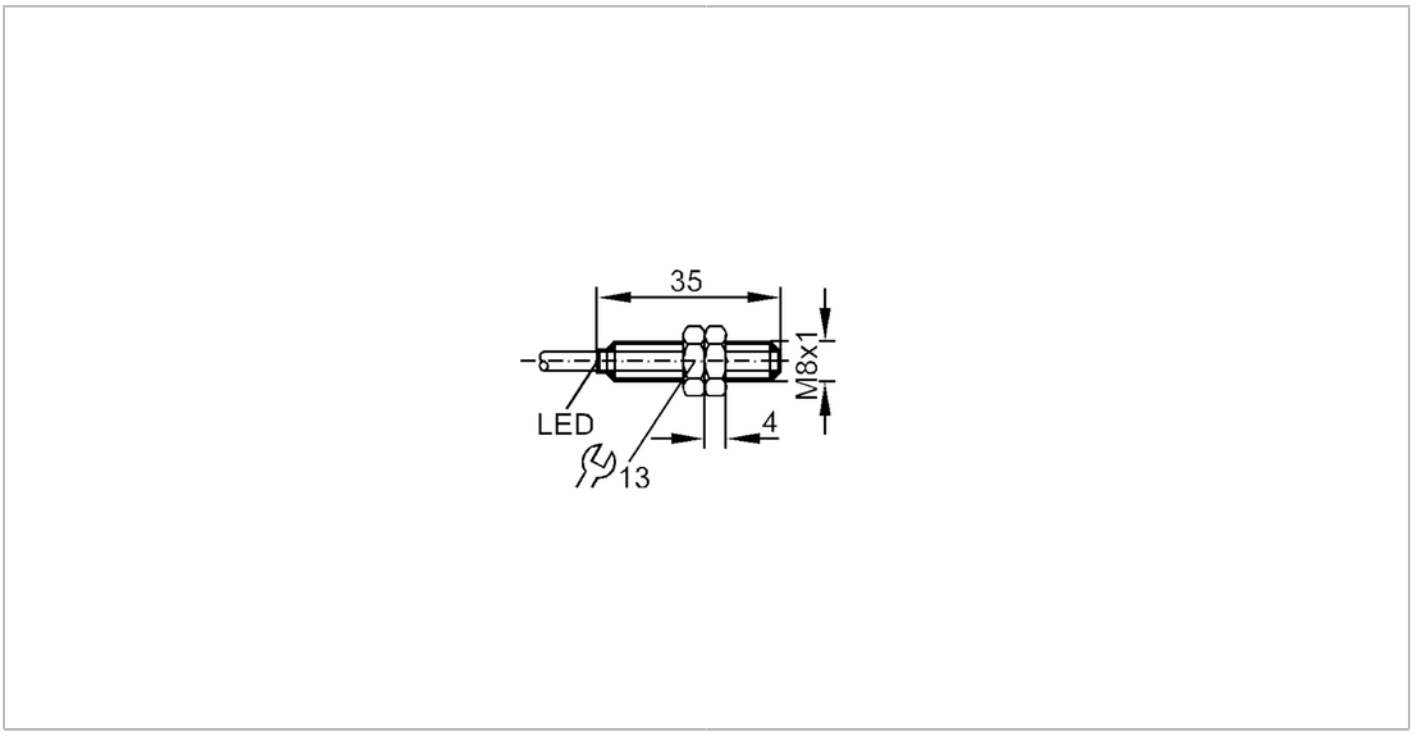

Product characteristics		
Electrical design		PNP
Output function		normally open
Sensing range	[mm]	1
Housing		threaded type
Dimensions	[mm]	M8 x 1 / L = 35
Electrical data		
Operating voltage	[V]	10...36 DC
Current consumption	[mA]	< 15
Protection class		III
Reverse polarity protection		yes
Outputs		
Electrical design		PNP
Output function		normally open
Max. voltage drop switching output DC	[V]	2.5
Permanent current rating of switching output DC	[mA]	200
Switching frequency DC	[Hz]	2000
Short-circuit protection		yes
Overload protection		yes
Detection zone		
Sensing range	[mm]	1
Real sensing range Sr	[mm]	1 ± 10 %

IE5267

Inductive sensor

IEB3001-BPKG RT

Operating distance	[mm]	0...0.81	
Accuracy / deviations			
Correction factor		steel: 1 / stainless steel: 0.7 / brass: 0.5 / aluminium: 0.4 / copper: 0.3	
Hysteresis	[% of Sr]	1...15	
Switch point drift	[% of Sr]	-10...10	
Operating conditions			
Ambient temperature	[°C]	-25...80	
Protection		IP 65	
Tests / approvals			
EMC		EN 61000-4-2 ESD	4 kV CD / 8 kV AD
		EN 61000-4-3 HF radiated	3 V/m
		EN 61000-4-4 Burst	2 kV
		EN 61000-4-6 HF conducted	3 V
		EN 55011	class B
MTTF	[years]	2804	
Mechanical data			
Weight	[g]	51.2	
Housing		threaded type	
Mounting		flush mountable	
Dimensions	[mm]	M8 x 1 / L = 35	
Thread designation		M8 x 1	
Materials		threaded sleeve: brass white bronze coated; sensing face: PBT; end cap: TPU	
Tightening torque	[Nm]	A = 5 mm: 1 Nm; B: 2 Nm	
Displays / operating elements			
Display		switching status	1 x LED, red
Accessories			
Items supplied		lock nuts: 2	
Remarks			
Remarks			
Pack quantity		1 pcs.	

IE5267

Inductive sensor

IEB3001-BPKG **RT**

Electrical connection

Cable: 2 m, PVC; 3 x 0.14 mm²

Connection

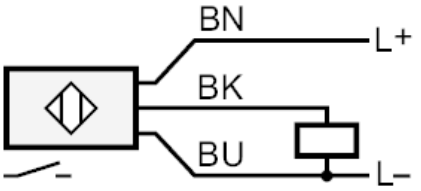

	Core colours :
BK =	black
BN =	brown
BU =	blue

Diagrams and graphs

Installation

