E21220

Fixture for mounting and fine adjustment of laser sensors

M18 FINE ADJUSTMENT 500

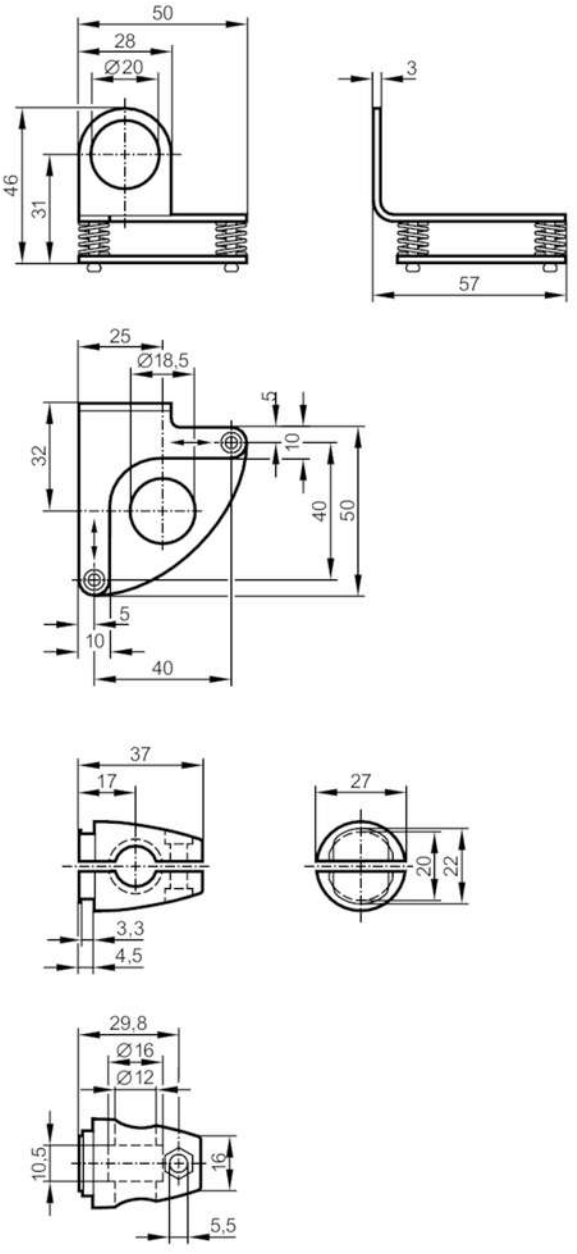

Application		
Design		clamp mounting
Mechanical data		
Weight	[g]	177
Type of mounting		Mounting rod; (Ø 12 mm)
Dimensions	[mm]	Ø 18.5
Materials		fixture: stainless steel (1.4571/316Ti); Clamp: stainless steel
Alignment range		fine adjustment in 2 axes ± 3°
Remarks		
Pack quantity		1 pcs.