DN4033

Switched-mode power supply 24 V DC

PSU-3AC/24VDC-10A

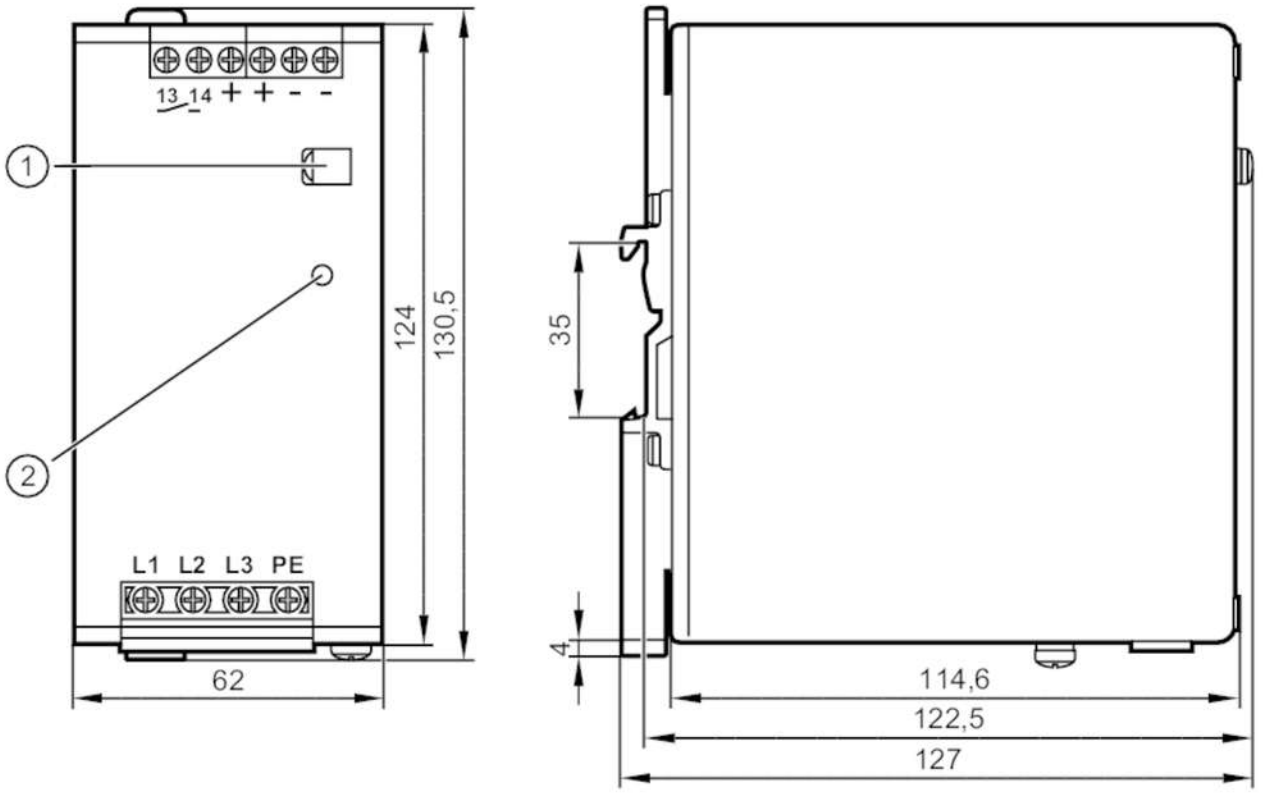

1 potentiometer 24...28 V DC
2 LED DC ok

Electrical data		
Frequency AC	[Hz]	47...64
Operating voltage tolerance	[%]	15...20
Nominal voltage AC	[V]	< 400
Input voltage range AC	[V]	380...480
Output voltage DC	[V]	24...28
Protection class		I; (IEC 61140)
Overvoltage protection		yes; (< 32 DC)
Output voltage	[V]	adjustable; output voltage to SELV, PELV
Max. output current at min. output voltage	[A]	10
Max. output current at max. output voltage	[A]	8.6
Max. output current peak at min. output voltage	[A]	12
Max. output current peak at max. output voltage	[A]	10.3
Output power (permanent)	[W]	240
Output power (peak)	[W]	288
Note on output power (peak)	[W]	≤ 45 °C permitted continuously; > 45 °C < 1 minute every 10 minutes
Power factor (nominal voltage 400 V AC / 50 Hz)		0.53

DN4033

Switched-mode power supply 24 V DC

PSU-3AC/24VDC-10A

Note on power factor (nominal voltage 400 V AC / 50 Hz)		with symmetrical phase voltage
Power factor (nominal voltage 480 V AC / 50 Hz)		0.52
Note on power factor (nominal voltage 480 V AC / 50 Hz)		with symmetrical phase voltage
Power reserve	[%]	20
Number of output circuits		1
Max. residual ripple	[mV]	50
Switch-on peak current (nominal voltage 400 V AC / 60 Hz)	[A]	4
Switch-on peak current (nominal voltage 480 V AC / 50 Hz)	[A]	4
Inrush current limitation		yes
Efficiency (nominal voltage 400 V AC / 60 Hz)	[%]	92.8
Efficiency (nominal voltage 480 V AC / 50 Hz)	[%]	92.9
External input protection		≤ B-6 A / ≤ C-3 A
Derating	[W/K]	6 (60...70 °C)
Mains buffering time (nominal voltage 400 V AC / 60 Hz)	[ms]	34
Mains buffering time (nominal voltage 480 V AC / 50 Hz)	[ms]	54
Input current (nominal voltage 400 V AC / 60 Hz)	[A]	0.7
Input current (nominal voltage 480 V AC / 50 Hz)	[A]	0.6
Power loss (nominal voltage 400 V AC / 60 Hz)	[W]	18.6
Power loss (nominal voltage 480 V AC / 50 Hz)	[W]	18.3
Back feeding protection	[V]	35
Outputs		
Short-circuit proof		yes
Overload protection		yes
Overload performance		output current constant
Type DC-OK signal		relay output
Reliability of the DC OK signal		60 V DC (0.3 A) / 30 V DC (1 A) / 30 V AC (0.5 A)
Operating conditions		
Ambient temperature	[°C]	-25...70
Note on ambient temperature		observe the free space for convection (see operating instructions)
Storage temperature	[°C]	-40...85
Max. relative air humidity	[%]	95; (IEC 60068-2-30)
Protection		IP 20; (EN 60529)

DN4033

Switched-mode power supply 24 V DC

PSU-3AC/24VDC-10A

Pollution degree		2; (IEC 62103: conductive soiling not permitted)	
Tests / approvals			
EMC		EN 61000-6-1	
		EN 61000-6-2	
		EN 61000-6-3	
		EN 61000-6-4	
		EN 61000-3-2	Class A
Vibration resistance		IEC 60068-2-6	±1,6 mm 2...17,8 Hz / 2 g 17,8...500 Hz
Shock resistance		IEC 60068-2-27	30 g 6 ms / 20 g 11 ms
Power Factor Correction (PFC)		met	
Mechanical data			
Weight	[g]	891.6	
Housing		housing for DIN rail mounting	
Type of mounting		mounting on DIN rail; (TH35 (EN 60715))	
Dimensions	[mm]	124 x 62 x 122.5	
Materials		steel sheet	
Displays / operating elements			
Display		DC ok	1 x LED
Remarks			
Remarks		Series connection of outputs only applies to identical units up to max. 150 V DC overall voltage	
Pack quantity		1 pcs.	
Electrical connection			
screw terminals:			
Connection			

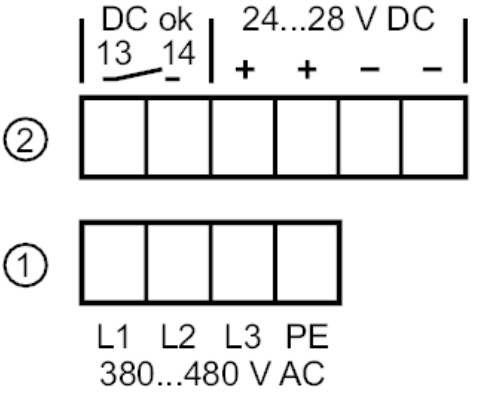

1: primary
2: secondary

DN4033

Switched-mode power supply 24 V DC

PSU-3AC/24VDC-10A

Diagrams and graphs

block diagram

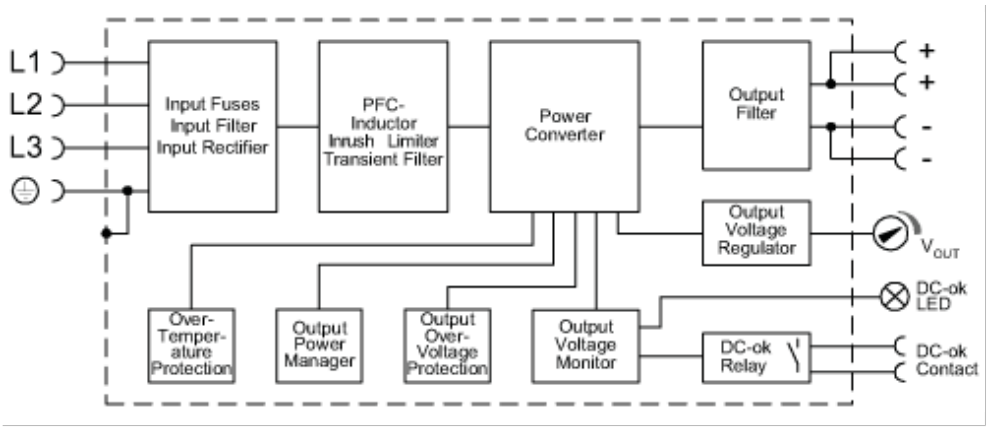

output characteristics

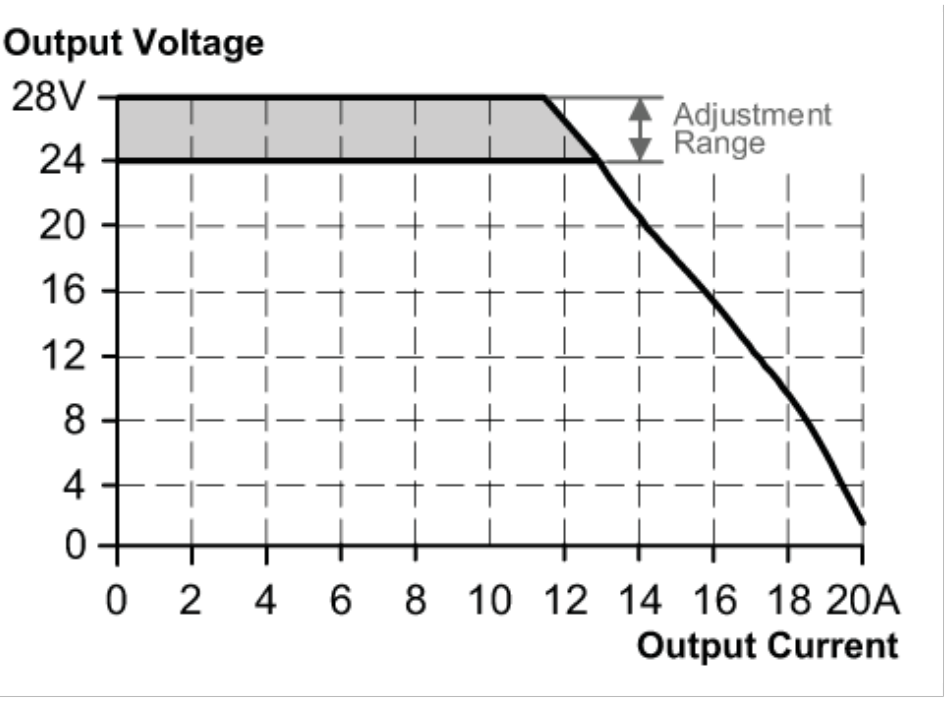

DN4033

Switched-mode power supply 24 V DC

PSU-3AC/24VDC-10A

characteristic curve for degree of efficiency / power loss

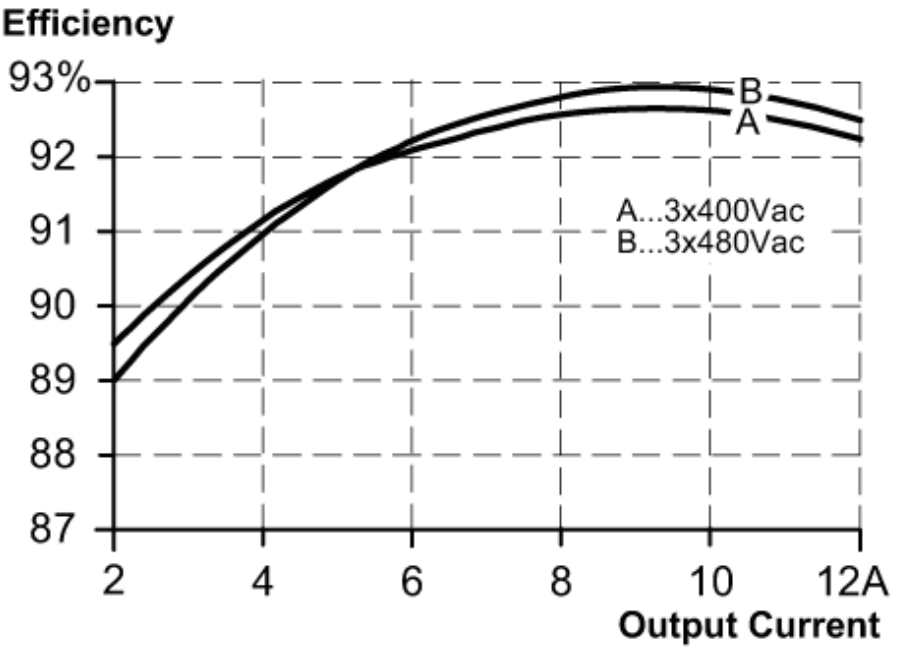

characteristic line for derating

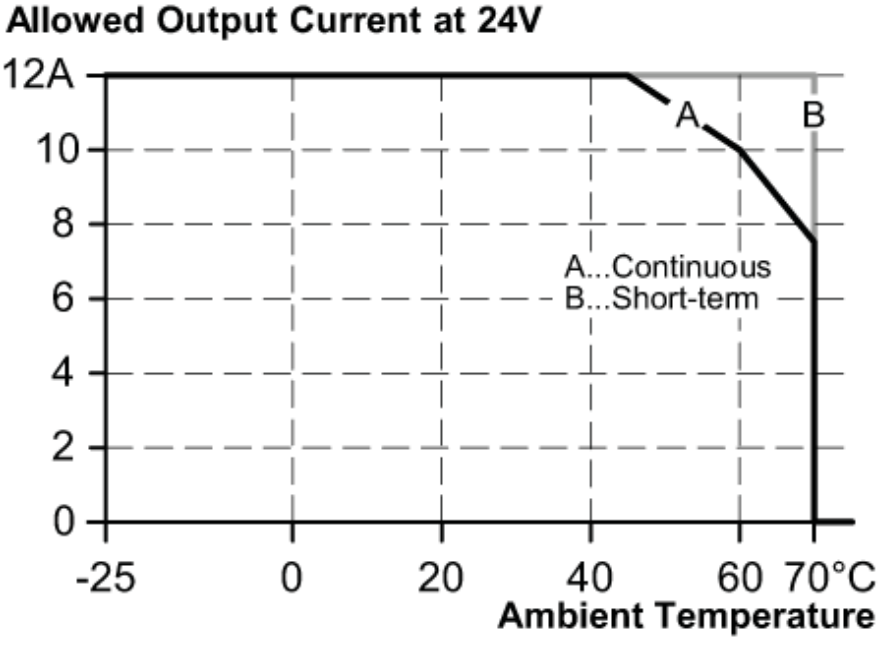

DN4033

Switched-mode power supply 24 V DC

PSU-3AC/24VDC-10A

characteristic line for mains buffering time

