

CONCEALED SPRINGLOADED PIN HINGES A

12-1-3859

Stainless steel spring. Hinges in raw steel and zinc plated steel with a zinc plated pin. Circlip in 1.4122 stainless steel.

Material	304 stainless steel
Finish	raw

Note	type 1
Weight (g)	46 g
Opening angle	270 °
Functions	

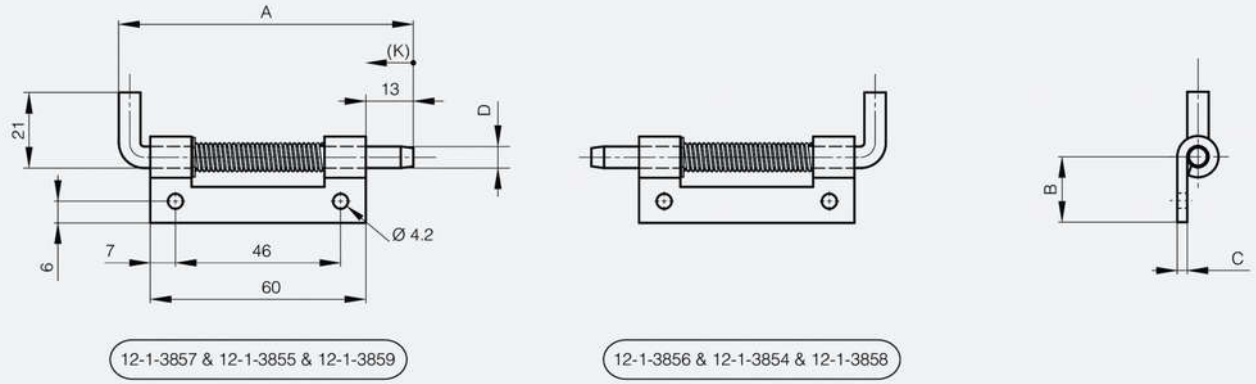

A (length)	82 mm
B (width)	18.2 mm
C	2.8 mm
D (pin diameter)	6
K	12 mm