# 34561-363 HORIZONTAL RAILS THREADED INSERT, M2.5, 63 HP

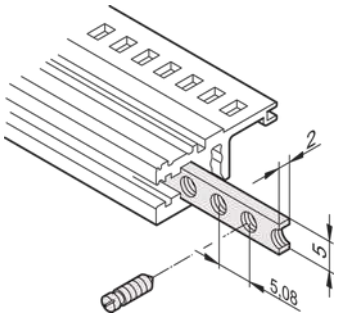


## KEY FEATURES

- The collar screws used for fixing partial-width front panels must be 12.3 mm long
- Usable for all horizontal rails

## PRODUCT ATTRIBUTES

- Product Type: Threaded Insert
- Product Family: EuropacPRO; RatiopacPRO; RatiopacPRO AIR; CompacPRO; PropacPRO; Inpac
- Works With: Subracks; Cases
- Rack Width: 84 HP
- Material: Steel
- Package Quantity: 1
- Length: 324.62 mm

## ADDITIONAL PRODUCT DETAILS

The threaded insert is a metal strip with thread M2.5 and allows the fixing of front panels.

Please take into consideration that deliveries may be carried out in the stated SPQs (SPQ, e.g. 5 pieces, 10 pieces, 50 pieces, etc.). Differing order quantities (e.g. 2 pieces) may be changed to the next possible delivery quantity = Standard Pack Quantity.

## CERTIFICATIONS

RoHS COMPLIANT


**North America**
All locations
+1.763.422.2661
Chat with us:
schroff.nvent.com

**Europe**
Straubenhardt, Germany
+49.7082.794.0
Betschdorf, France
+33.3.88.90.64.90
Warsaw, Poland
+48.22.209.98.35
Assago, Italy
+39.02.932.7141
Chat with us:
schroff.nvent.com

**Asia**
Shanghai, China
+86.21.2412.6943
Qingdao, China
+86.532.8771.6101
Singapore
+65.6768.5800
Shin-Yokohama, Japan
+81.45.476.0271
Chat with us:
schroff.nvent.com

**Middle East & India**
Dubai, United Arab Emirates
+971.4.378.1700
Bangalore, India
+91.80.6715.2001
Istanbul, Turkey
+90.216.250.7374
Chat with us:
schroff.nvent.com


nVent

Our powerful portfolio of brands:
nVent.com **CADDY ERICO HOFFMAN RAYCHEM SCHROFF TRACER**


© 2023 nVent. All nVent marks and logos are owned or licensed by nVent Services GmbH or its affiliates. All other trademarks are the property of their respective owners.

nVent reserves the right to change specifications without notice.