# ASCO™ 2-Way NC, NO Solenoid Valves

Pilot Operated Floating Piston for High Pressure Fluids | 1/4" and 3/4"

**Series 223**

## Features and Benefits

- Heavy duty two way shut-off solenoid valves for control of air, inert gas, water, oil and other gases/liquids compatible with the seal materials used
- Valves require a minimum operating pressure
- The solenoid valves satisfy all relevant CE and UKCA directives

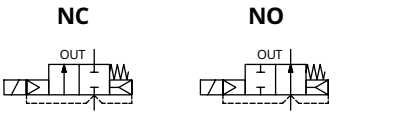




## General

**Differential pressure** See «SPECIFICATIONS» [1 bar =100 kPa]
**Maximum viscosity** 65 cSt ($mm^2/s$)
**Response time** 15 - 60 ms

| Fluids (*) | Temperature range (TS) | Seal materials (*) |
|---|---|---|
| air, inert gas, water, oil | -20°C to +90°C | PTFE/NBR |

## Materials in Contact with Fluid

**(*) Ensure that the compatibility of the fluids in contact with the materials is verified**

| | Brass body | Stainless steel body |
|---|---|---|
| **Body** | Brass | AISI 304 Stainless steel |
| **Core tube** | Stainless steel | Stainless steel |
| **Core and plugnut** | Stainless steel | Stainless steel |
| **Springs** | Stainless steel | Stainless steel |
| **Seat** | Brass | Stainless steel |
| **Core disc** | NBR or PTFE | PTFE |
| **Seals** | NBR | NBR |
| **Piston** | Stainless steel | Stainless steel |
| **Piston disc** | PTFE | PTFE |
| **Piston rings** | PTFE (carbon filled) | PTFE (carbon filled) |
| **Shading coils** | Copper | Silver |

## Electrical Characteristics

| | |
|---|---|
| **Coil insulation class** | F |
| **Connector** | Spade plug (cable Ø 6-10 mm) |
| **Connector specification** | ISO 4400 / EN 175301-803, form A |
| **Electrical safety** | IEC 335 |
| **Electrical enclosure protection** | Moulded IP65 (EN 60529) |
| **Standard voltages** | DC (=) : 24V - 48V |
| **(Other voltages and 60 Hz on request)** | AC (~) : 24V - 48V - 115V - 230V / 50 Hz |

# ASCO™ 2-Way NC, NO Solenoid Valves

Pilot Operated Floating Piston for High Pressure Fluids | 1/4" and 3/4"

**Series 223**

| Prefix option | Power ratings | | | | Operator ambient temperature range (TS) | Replacement coil | | Type [1] |
|---|---|---|---|---|---|---|---|---|
| | Inrush ~ | Holding ~ | | Hot/Cold | | ~ | = | |
| | (VA) | (VA) | (W) | (W) | (C°) | 230 V/50 Hz | 24 V DC | |
| SC | 55 | 23 | 10.5 | 9/11.2 | -20 to +75 | 400425-117 | 400425-142 | 01 |
| | 78 | 35 | 16.7 | - | -20 to +50 | 400425-217 | - | 01 |
| | - | - | - | 14/19.7 | -20 to +25 | - | 400425-342 | 01 |
| | 110 | 33.6 | 15.4 | 12/16.8 | -20 to +75 | 400525-117 | 400625-142 | 02 |
| | 240 | 43 | 20 | 16.8/23 | -20 to +50 | 400525-217 | 400625-242 | 02 |

1 For dimensions, see drawing(s) for each construction type on the following page(s)

| Pipe size | Orifice size | flow coefficient Kv | | operating pressure differential (bar) | | | | | | | power coil (W) | | catalogue number | | options | | |
|---|---|---|---|---|---|---|---|---|---|---|---|---|---|---|---|---|---|
| | | | | min. | max. (PS) | | | | | | | | | | FPM | EPDM | PTFE |
| | | | | | air (*) | | water (*) | | oil (*) | | | | brass | Stainless steel | | | |
| | (mm) | ($m^3$/h) | (l/mm) | | ~ | = | ~ | = | ~ | = | ~ | = | | | | | |
| **NC - Normally Closed** | | | | | | | | | | | | | | | | | |
| Rp 1/4" | 8 | 1.3 | 21.7 | 0.7 | 50 | 30 | 50 | 30 | 50 | 30 | 10.5 | 11.2 | SCE223A421 | SCE223A404 | V | E | T |
| | | | | 0.7 | 100 | 40 | 100 | 40 | 100 | 40 | 16.7 | 19.7 | SCE223A425 | SCE223A406 | V | E | T |
| Rp 3/8" | 8 | 1.3 | 21.7 | 0.7 | 50 | 30 | 50 | 30 | 50 | 30 | 10.5 | 11.2 | SCE223A423 | SCE223A407 | V | E | T |
| | | | | 0.7 | 100 | 40 | 100 | 40 | 100 | 40 | 16.7 | 19.7 | SCE223A427 | SCE223A408 | V | E | T |
| Rp 1/2" | 9 | 2.7 | 45 | 1.8 | 50 | 30 | 50 | 30 | 50 | 30 | 10.5 | 11.2 | SCE223A422 | SCE223A409 | V | E | T |
| | | | | 1.8 | 100 | 40 | 100 | 40 | 100 | 40 | 16.7 | 19.7 | SCE223A403 | SCE223A410 | V | E | T |
| Rp 3/4" | 19 | 6.7 | 112 | 1.8 | 20 | 20 | 20 | 20 | 20 | 20 | 10.5 | 11.2 | SCE223A424 | SCE223A411 | V | E | T |
| | | | | 1.8 | 50 | 40 | 50 | 40 | 50 | 40 | 16.7 | 19.7 | SCE223A405 | SCE223A412 | V | E | T |
| **NO - Normally Open** | | | | | | | | | | | | | | | | | |
| Rp 1/4" | 8 | 1.3 | 21.7 | 0.7 | 40 | 40 | 40 | 40 | 40 | 40 | 15.4 | 16.8 | SCE223A525 | SCE223A506 | V | E | T |
| Rp 3/8" | 8 | 1.3 | 21.7 | 0.7 | 40 | 40 | 40 | 40 | 40 | 40 | 15.4 | 16.8 | SCE223A527 | SCE223A508 | V | E | T |
| Rp 1/2" | 9 | 2.7 | 45 | 1.8 | 40 | 40 | 40 | 40 | 40 | 40 | 15.4 | 16.8 | SCE223A503 | SCE223A510 | V | E | T |
| Rp 3/4" | 19 | 6.7 | 112 | 1.8 | 40 | 40 | 40 | 40 | 40 | 40 | 15.4 | 23.0 | SCE223A505 | SCE223A512 | V | E | T |

## Options

- Valves can also be supplied with FPM (fluor elastomer), EPDM (ethylene-propylene), CR (chloroprene) and PTFE seals and discs. Use the appropriate optional suffix letter for identification.
- Waterproof enclosure with embedded screw terminal coil according to protection class IP67.
- Explosionproof enclosures for use in zones 1/21-2/22, categories 2-3 to ATEX Directive 2014/34/EU (see "Explosionproof solenoids" section)
- Electrical enclosures according to "NEMA" standards are available
- Compliance with "UL", "CSA" and other local approvals available on request
- Other pipe connections are available on request
- Connector plug with visual indication and peak voltage suppression or with cable length of 2 m (see Solenoids, Coils & Accessories section)

## Installation

- The solenoid valves can be mounted in any position without affecting operation
- Pipe thread connection identifier is 8 = NPT (ANSI 1.20.3)
- Installation/maintenance instructions are included with each valve

| Spare parts kit & Accessories | | |
|---|---|---|
| Catalog number | spare part kit no. | |
| | ~ | = |
| SCE223A403 | C326654 | C326653 |
| SCE223A404 | C326642 | C326642 |
| SCE223A405 | C326655 | C326655 |
| SCE223A406 | C326643 | C326642 |
| SCE223A407 | C326642 | C326642 |
| SCE223A408 | C326643 | C326642 |
| SCE223A409 | C326653 | C326653 |
| SCE223A410 | C326654 | C326653 |
| SCE223A411 | C326655 | C326655 |
| SCE223A412 | C326655 | C326655 |
| SCE223A421 | C326642 | C326642 |
| SCE223A422 | C326653 | C326653 |
| SCE223A423 | C326642 | C326642 |
| SCE223A424 | C326655 | C326655 |
| SCE223A425 | C326643 | C326642 |
| SCE223A427 | C326643 | C326642 |
| SCE223A503 | C326658 | C326659 |
| SCE223A505 | C326660 | C326661 |
| SCE223A506 | C326656 | C326657 |
| SCE223A508 | C326656 | C326657 |
| SCE223A510 | C326658 | C326659 |
| SCE223A512 | C326660 | C326661 |
| SCE223A525 | C326656 | C326657 |
| SCE223A527 | C326656 | C326657 |

(1) Standard prefixes/suffixes are also applicable to kits

**ORDERING EXAMPLES:**

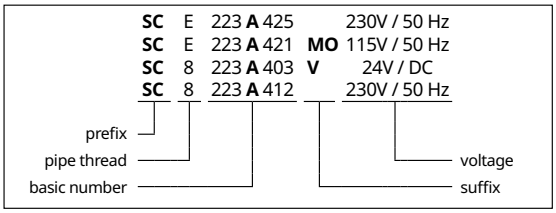


**ORDERING EXAMPLES KITS:**

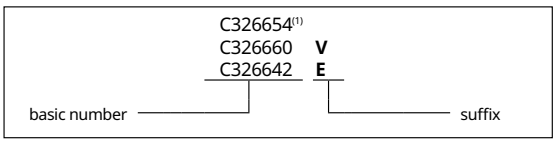

## **DIMENSIONS** (mm), **WEIGHT** (kg)



**TYPE 01**

Prefix "SC" Solenoid
Epoxy moulded
IEC 335 / ISO 4400
IP65

**SCE223A404/A406/A407/A408 (AC/DC)**
**SCE223A421/A423/A425/A427 (AC/DC)**

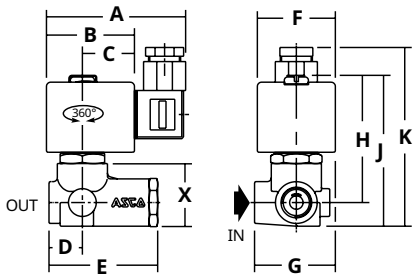


**SCE223A403/A409/A410/A422 (AC/DC)**

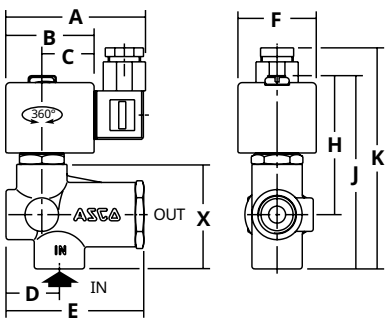


**SCE223A405/A424 (AC/DC)**

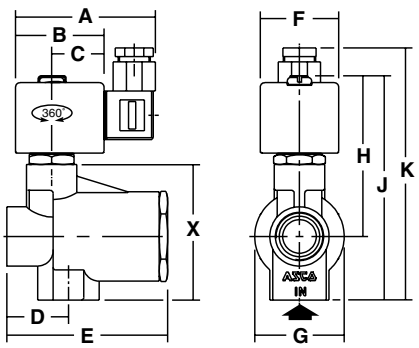


**SCE223A411/A412 (AC/DC)**

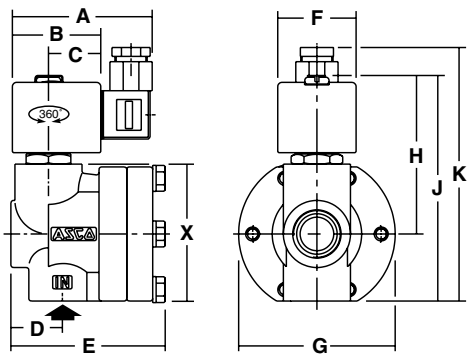

## **DIMENSIONS** (mm), **WEIGHT** (kg)



**TYPE 02**
Prefix "SC" Solenoid
Epoxy moulded
IEC 335 / ISO 4400
IP65

**SCE223A506/A508/A525/A527 (AC/DC)**

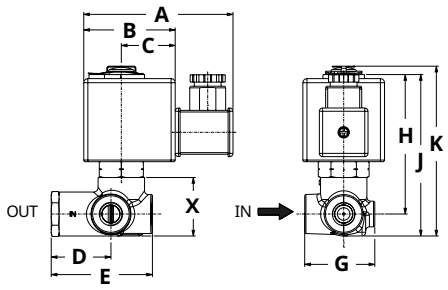


**SCE223A503/A510 (AC/DC)**

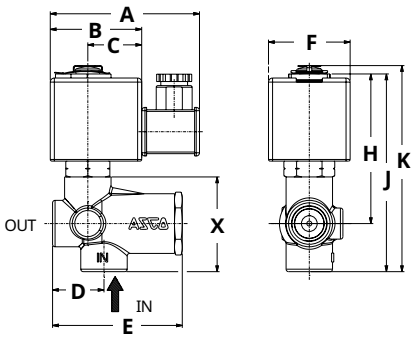


**SCE223A505 (AC/DC)**

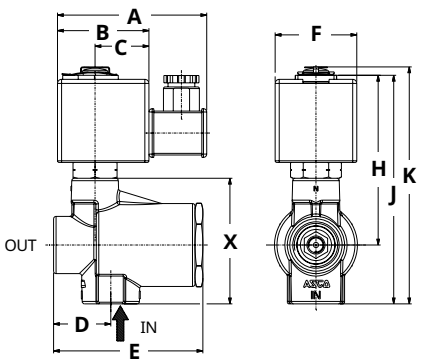


**SCE223A512 (AC/DC)**

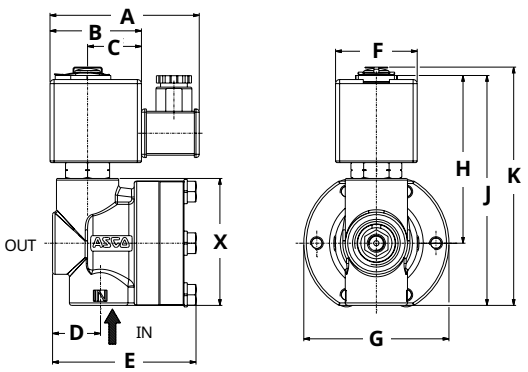

| type | prefix option | catalogue number | A | B | C | D | E | F | G | H | J | K | X | weight (2) |
|---|---|---|---|---|---|---|---|---|---|---|---|---|---|---|
| 01 | SC | SCE223A403 | 80 | 50 | 30 | 31 | 78 | 45 | - | 78 | 109 | 126 | 60 | 0.9 |
| | | SCE223A404 | 80 | 50 | 30 | 20 | 65 | 45 | 46 | 72 | 86 | 103 | 37 | 0.7 |
| | | SCE223A405 | 80 | 50 | 30 | 34 | 91 | 45 | 50 | 91 | 127 | 144 | 78 | 1.5 |
| | | SCE223A406 | 80 | 50 | 30 | 20 | 65 | 45 | 46 | 72 | 86 | 103 | 37 | 0.7 |
| | | SCE223A407 | 80 | 50 | 30 | 20 | 65 | 45 | 46 | 72 | 86 | 103 | 37 | 0.7 |
| | | SCE223A408 | 80 | 50 | 30 | 20 | 65 | 45 | 46 | 72 | 86 | 103 | 37 | 0.7 |
| | | SCE223A409 | 80 | 50 | 30 | 31 | 78 | 45 | - | 78 | 109 | 126 | 60 | 0.9 |
| | | SCE223A410 | 80 | 50 | 30 | 31 | 78 | 45 | - | 78 | 109 | 126 | 60 | 0.9 |
| | | SCE223A411 | 80 | 50 | 30 | 29 | 88 | 45 | 89 | 88 | 128 | 143 | 77 | 2.3 |
| | | SCE223A412 | 80 | 50 | 30 | 29 | 88 | 45 | 89 | 88 | 128 | 143 | 77 | 2.3 |
| | | SCE223A421 | 80 | 50 | 30 | 20 | 65 | 45 | 46 | 72 | 86 | 103 | 37 | 0.7 |
| | | SCE223A422 | 80 | 50 | 30 | 31 | 78 | 45 | - | 78 | 109 | 126 | 60 | 0.9 |
| | | SCE223A423 | 80 | 50 | 30 | 20 | 65 | 45 | 46 | 72 | 86 | 103 | 37 | 0.7 |
| | | SCE223A424 | 80 | 50 | 30 | 34 | 91 | 45 | 50 | 91 | 127 | 144 | 78 | 1.5 |
| | | SCE223A425 | 80 | 50 | 30 | 20 | 65 | 45 | 46 | 72 | 86 | 103 | 37 | 0.7 |
| | | SCE223A427 | 80 | 50 | 30 | 20 | 65 | 45 | 46 | 72 | 86 | 103 | 37 | 0.7 |
| 02 | SC | SCE223A503 | 91 | 56 | 33 | 31 | 79 | 50 | - | 92 | 121 | 126 | 58 | 0.9 |
| | | SCE223A505 | 91 | 56 | 33 | 35 | 91 | 50 | - | 104 | 140 | 145 | 77 | 1.5 |
| | | SCE223A506 | 91 | 56 | 33 | 37 | 62 | 50 | 43 | 85 | 99 | 104 | 36 | 0.7 |
| | | SCE223A508 | 91 | 56 | 33 | 37 | 62 | 50 | 43 | 85 | 99 | 104 | 36 | 0.7 |
| | | SCE223A510 | 91 | 56 | 33 | 31 | 79 | 50 | - | 92 | 121 | 126 | 58 | 0.9 |
| | | SCE223A512 | 91 | 56 | 33 | 29 | 88 | 50 | 89 | 103 | 141 | 146 | 78 | 2.3 |
| | | SCE223A525 | 91 | 56 | 33 | 37 | 62 | 50 | 43 | 85 | 99 | 104 | 36 | 0.7 |
| | | SCE223A527 | 91 | 56 | 33 | 37 | 62 | 50 | 43 | 85 | 99 | 104 | 36 | 0.7 |


Availability, design and specifications are subject to change without notice.
© 2023 Emerson Electric Co. All rights reserved.