

Image may differ from product. See technical specification for details.

C 2218

CARB toroidal roller bearing

CARB toroidal roller bearings are unique: as well as accommodating misalignment without increased stress levels, they also provide frictionless axial movement within the bearing in the non-locating position in self-aligning bearing arrangements. Being SKF Explorer

bearings, they can accommodate higher load levels and provide significantly extended service life.

- Accommodate misalignment and axial displacement within the bearing
- High radial load carrying capacity
- Provide frictionless axial movement
- Long bearing system life
- Reduce noise and vibration levels

Overview

Dimensions

Bore diameter	90 mm
Outside diameter	160 mm
Width	40 mm

Performance

Basic dynamic load rating	325 kN
Basic static load rating	380 kN
Reference speed	3 800 r/min
Limiting speed	5 300 r/min
SKF performance class	SKF Explorer

Properties

Number of rows	1
Locating feature, bearing outer ring	Without
Bore type	Cylindrical
Cage	Sheet metal
Radial internal clearance	CN
Tolerance class	Normal
Sealing	Without
Lubricant	None
Relubrication feature	Without
Candidate for remanufacturing	Yes

Logistics

Product net weight	3.2 kg
eClass code	23-05-09-13
UNSPSC code	31171505

Technical specification

Bore type	Cylindrical

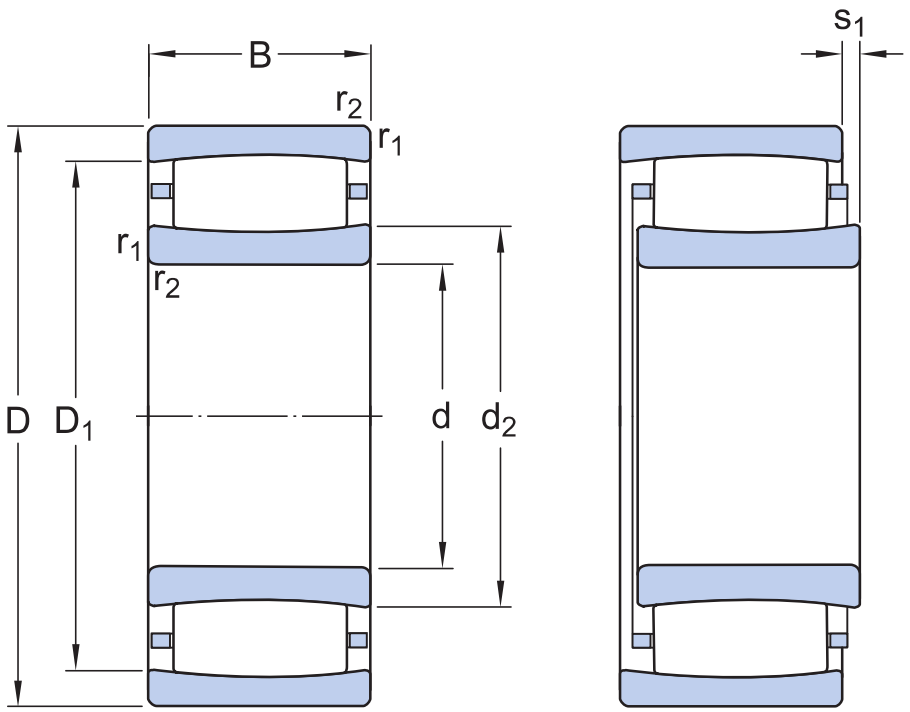

Dimensions

d	90 mm	Bore diameter
D	160 mm	Outside diameter
B	40 mm	Width
d_2	≈ 111 mm	Shoulder diameter of inner ring
D_1	≈ 144 mm	Shoulder or recess diameter of outer ring
s_1	max. 9.5 mm	Permissible axial displacement
$r_{1,2}$	min. 2 mm	Chamfer dimension

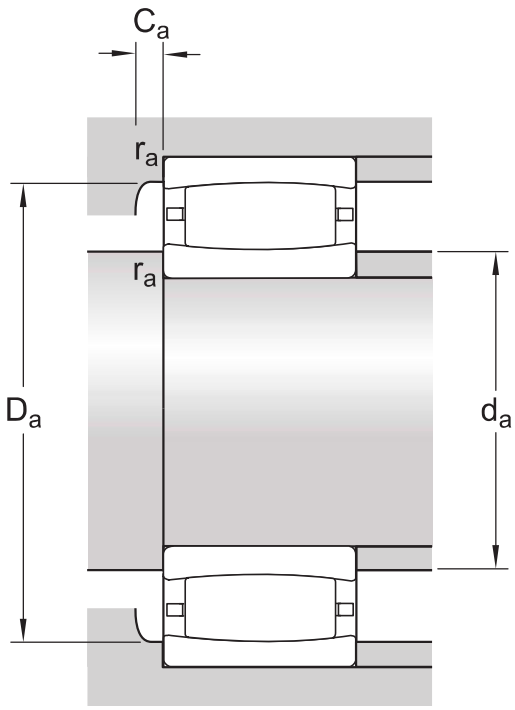

Abutment dimensions

d_a	min. 101 mm	Diameter of shaft abutment
d_a	max. 124 mm	Diameter of shaft abutment
D_a	min. 133 mm	Diameter of housing abutment
D_a	max. 149 mm	Abutment diameter housing
C_a	min. 1.4 mm	Minimum width of space required in housing
r_a	max. 2 mm	Radius of fillet
	A negative value for C_a is theoretical.	Notes - Bullet list

Calculation data

SKF performance class		SKF Explorer
Basic dynamic load rating	C	325 kN
Basic static load rating	C_0	380 kN
Fatigue load limit	P_u	41.5 kN
Reference speed		3 800 r/min
Limiting speed		5 300 r/min
Misalignment factor	k_1	0.104
Internal clearance factor	k_2	0.117

Tolerances and clearances

GENERAL BEARING SPECIFICATIONS

- Tolerances: Normal, P5, tapered bore 1:12, tapered bore 1:30
- Radial internal clearance: cylindrical bore, tapered bore

BEARING INTERFACES

- Seat tolerances for standard conditions
- Tolerances and resultant fit

More Information

Product details

- Designs and variants
- General bearing specifications
- Loads
- Temperature limits
- Permissible speed
- Design considerations
- Mounting
- Designation system

Engineering information

- Principles of rolling bearing selection
- General bearing knowledge
- Bearing selection process
- Bearing failure and how to prevent it

Tools

- SimPro Quick
- SKF Product select - Select and evaluate bearing
- SKF Product select - Combine bearing with housing
- LubeSelect for SKF greases
- Drive-up Method Program
- Heater selection tool
- Oil Injection Method Program
- Tool and Accessory Selector for sleeves and shafts

Terms of use

By accessing and using this website / app owned and published by AB SKF (publ.) (556007-3495 · Gothenburg) (“SKF”), you agree to the following terms and conditions:

Warranty Disclaimer and Limitation of Liability
Although every care has been taken to assure the accuracy of the information on this website / app, SKF provides this information "AS IS" and DISCLAIMS ALL WARRANTIES, EXPRESS OR IMPLIED, INCLUDING, BUT NOT LIMITED TO, IMPLIED WARRANTIES OF MERCHANTABILITY AND FITNESS FOR A PARTICULAR PURPOSE. You acknowledge that your use of this website / app is at your sole risk, that you assume full responsibility for all costs associated with use of this website / app, and that SKF shall not be liable for any direct, incidental, consequential, or indirect damages of any kind arising out of your access to, or use of the information or software made available on this website / app.

Any warranties and representations in this website / app for SKF products or services that you purchase or use will be subject to the agreed upon terms and conditions in the contract for such product or service.

Further, for non-SKF websites / apps that are referenced in our website / app or where a hyperlink appears, SKF makes no warranties concerning the accuracy or reliability of the information in these websites / apps and assumes no responsibility for material created or published by third parties contained therein. In addition, SKF does not warrant that this website / app or these other linked websites / apps are free from viruses or other harmful elements.

Third Party Services
When viewing YouTube content via the SKF website(s) (i.e. using YouTube API Services), you agree to be bound by the YouTube Terms of Service.

Copyright
Copyright in this website / app copyright of the information and software made available on this website / app rest with SKF or its licensors. All rights are reserved. All licensed material will reference the licensor that has granted SKF the right to use the material. The information and software made available on this website / app may not be reproduced, duplicated, copied, transferred, distributed, stored, modified, downloaded or otherwise exploited for any commercial use without the prior written approval of SKF. However, it may be reproduced, stored and downloaded for use by individuals without prior written approval of SKF. Under no circumstances may this information or software be supplied to third parties.

This website /app includes certain images used under license from Shutterstock, Inc.

Trademarks and Patents
All trademarks, brand names, and corporate logos displayed on the website / app are the property of SKF or its licensors, and may not be used in any way without prior written approval by SKF. All licensed trademarks published on this website / app reference the licensor that has granted SKF the right to use the trademark. Access to this website / app does not grant to the user any license under any patents owned by or licensed to SKF.

Changes
SKF reserves the right to make changes or additions to this website / app at any time.