INTEGRATED CIRCUIT

TOSHIBA

TECHNICAL DATA

TOSHIBA MOS DIGITAL INTEGRATED CIRCUIT

TC551001 BPL / BFL / BFTL / BTRL - 70L
TC551001 BPL / BFL / BFTL / BTRL - 85L
TC551001 BPL / BFL / BFTL / BTRL - 10L

SILICON GATE CMOS

131,072-WORD BY 8-BIT STATIC RAM

DESCRIPTION

The TC551001BPL/BFL/BFTL/BTRL is a 1,048,576-bit static random access memory (SRAM) organized as 131,072 words by 8 bits. Fabricated using Toshiba's CMOS Silicon gate process technology, this device operates from a single 5 V ± 10% power supply. Advanced circuit technology provides both high speed and low power at an operating current of 5 mA/MHz (typ) and a minimum cycle time of 70 ns. It is automatically placed in low-power mode at 2 μA standby current (typ) when chip enable ($\overline{CE1}$) is asserted high or (CE2) is asserted low. There are three control inputs. $\overline{CE1}$ and CE2 are used to select the device and for data retention control, and output enable ($\overline{OE}$) provides fast memory access. This device is well suited to various microprocessor system applications where high speed, low power and battery backup are required. The TC551001BPL/BFL/BFTL/BTRL is available in a standard plastic 32-pin dual-in-line package (DIP), plastic 32-pin small-outline package (SOP) and normal and reverse pinout plastic 32-pin thin-small-outline package (TSOP).

FEATURES

- Low-power dissipation
  Operating: 27.5 mW/MHz (typical)
- Standby current of 4 μA (maximum) at Ta = 25°C
- Single power supply voltage of 5 V ± 10%
- Power down features using $\overline{CE1}$ and CE2.
- Data retention supply voltage of 2 to 5.5 V
- Direct TTL compatibility for all inputs and outputs
- Access Times (maximum):

	TC551001BPL/BFL/BFTL/BTRL		
	-70L	-85L	-10L
Access Time	70 ns	85 ns	100 ns
$\overline{CE1}$ Access Time	70 ns	85 ns	100 ns
CE2 Access Time	70 ns	85 ns	100 ns
$\overline{OE}$ Access Time	35 ns	45 ns	50 ns

- Packages: DIP32-P-600 (BPL) (Weight: 4.45 g typ)
  SOP32-P-525 (BFL) (Weight: 1.04 g typ)
  TSOP32-P-0820 (BFTL) (Weight: 0.34 g typ)
  TSOP32-P-0820A (BTRL) (Weight: 0.34 g typ)

PIN ASSIGNMENT (TOP VIEW)

○ 32 PIN DIP & SOP

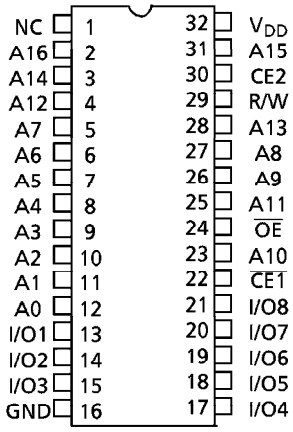

○ 32 PIN TSOP

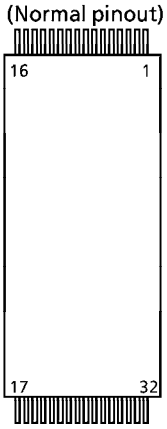

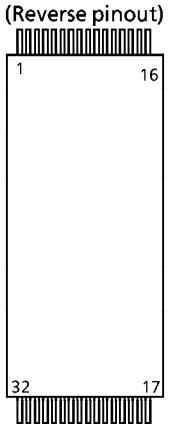

PIN NAMES

A0 to A16	Address Inputs
R/W	Read/Write Control
$\overline{OE}$	Output Enable
$\overline{CE1}$, CE2	Chip Enable
I/O1 to I/O8	Data Input/Output
V_{DD}	Power (+ 5 V)
GND	Ground
NC	No Connection

Pin No.	1	2	3	4	5	6	7	8	9	10	11	12	13	14	15	16
Pin Name	A_{11}	A_9	A_8	A_{13}	R/W	CE2	A_{15}	V_{DD}	NC	A_{16}	A_{14}	A_{12}	A_7	A_6	A_5	A_4
Pin No.	17	18	19	20	21	22	23	24	25	26	27	28	29	30	31	32
Pin Name	A_3	A_2	A_1	A_0	I/O1	I/O2	I/O3	GND	I/O4	I/O5	I/O6	I/O7	I/O8	$\overline{CE1}$	A_{10}	$\overline{OE}$

© The information contained herein is presented only as a guide for the applications of our products. No responsibility is assumed by TOSHIBA CORPORATION for any infringements of intellectual property or other rights of the third parties which may result from its use. No license is granted by implication or otherwise under any intellectual property or other rights of TOSHIBA CORPORATION or others.

© These TOSHIBA products are intended for use in general commercial applications (office equipment, communication equipment, measuring equipment, domestic appliances, etc.). please make sure that you consult with us before you use these TOSHIBA products in equipment which requires extraordinarily high quality and/or reliability, and in equipment which may involve life threatening or critical application, including but not limited to such uses as atomic energy control, airplane or spaceship instrumentation, traffic signals, medical instrumentation, combustion control, all types of safety devices, etc. TOSHIBA cannot accept and hereby disclaims liability for any damage which may occur in case the TOSHIBA products are used in such equipment or applications without prior consultation with TOSHIBA.

BLOCK DIAGRAM

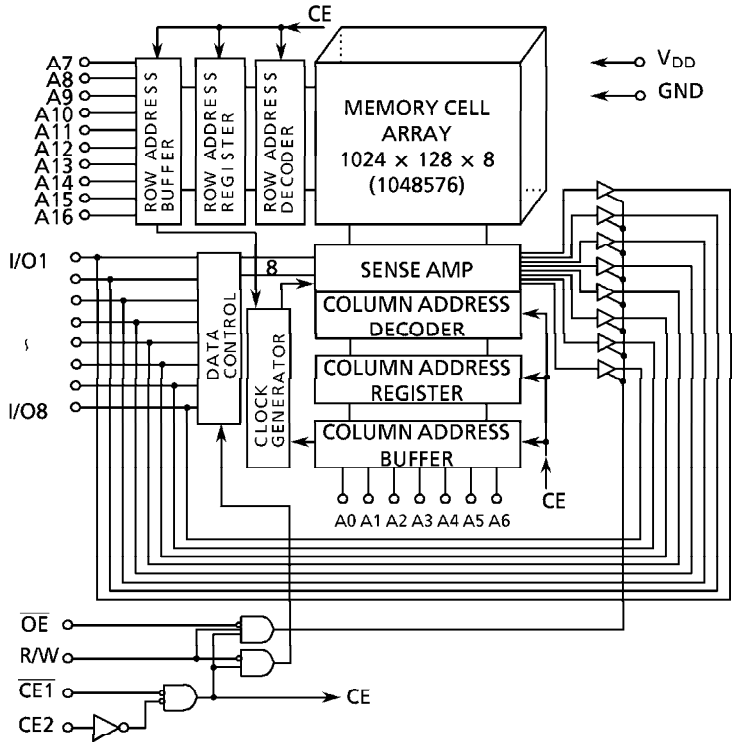

OPERATION MODE

MODE	$\overline{CE1}$	CE2	$\overline{OE}$	R/W	I/O1 to I/O8	POWER
Read	L	H	L	H	D_{OUT}	I_{DDO}
Write	L	H	×	L	D_{IN}	I_{DDO}
Outputs Disabled	L	H	H	H	High-Z	I_{DDO}
Standby	H	×	×	×	High-Z	I_{DDS}
	×	L	×	×	High-Z	I_{DDS}

Note: × = don't care. H = logic high. L = logic low.

ABSOLUTE MAXIMUM RATINGS

SYMBOL	RATING	VALUE	UNIT
V_{DD}	Power Supply Voltage	− 0.3 to 7.0	V
V_{IN}	Input Voltage	− 0.3* to 7.0	V
$V_{I/O}$	Input and Output Voltage	− 0.5 to V_{DD} + 0.5	V
P_D	Power Dissipation	1.0/0.6**	W
Tsolder	Soldering Temperature (10 s)	260	°C
Tstrg.	Storage Temperature	− 55 to 150	°C
Topr.	Operating Temperature	0 to 70	°C

* − 3.0 V when measured at a pulse width of 50 ns ** SOP

DC RECOMMENDED OPERATING CONDITIONS (Ta = 0° to 70°C)

SYMBOL	PARAMETER	MIN	TYP	MAX	UNIT
V_{DD}	Power Supply Voltage	4.5	5.0	5.5	V
V_{IH}	Input High Voltage	2.2	–	V_{DD} + 0.3	
V_{IL}	Input Low Voltage	– 0.3*	–	0.8	
V_{DH}	Data Retention Supply Voltage	2.0	–	5.5	

* – 3.0 V when measured at a pulse width of 50 ns

DC CHARACTERISTICS (Ta = 0° to 70°C, V_{DD} = 5 V ± 10%)

SYMBOL	PARAMETER	TEST CONDITION			MIN	TYP	MAX	UNIT
I_{IL}	Input Leakage Current	V_{IN} = 0 V to V_{DD}			–	–	± 1.0	μA
I_{OH}	Output High Current	V_{OH} = 2.4 V			– 1.0	–	–	mA
I_{OL}	Output Low Current	V_{OL} = 0.4 V			4.0	–	–	mA
I_{LO}	Output Leakage Current	$\overline{CE1}$ = V_{IH} or CE2 = V_{IL} or R/W = V_{IL} or $\overline{OE}$ = V_{IH}, V_{OUT} = 0 V to V_{DD}			–	–	± 1.0	μA
I_{DDO1}	Operating Current	$\overline{CE1}$ = V_{IL} and CE2 = V_{IH} and R/W = V_{IH}, I_{OUT} = 0 mA Other Inputs = V_{IH}/V_{IL}	Tcycle	min	–	–	70	mA
				1 μs	–	–	20	
I_{DDO2}		$\overline{CE1}$ = 0.2 V and CE2 = V_{DD} – 0.2 V R/W = V_{DD} – 0.2 V, I_{OUT} = 0 mA Other Inputs = V_{DD} – 0.2 V/0.2 V	Tcycle	min	–	–	60	mA
				1 μs	–	–	10	
I_{DDS1}	Standby Current	$\overline{CE1}$ = V_{IH} or CE2 = V_{IL}			–	–	3	mA
I_{DDS2} (Note)		$\overline{CE1}$ = V_{DD} – 0.2 V or CE2 = 0.2 V V_{DD} = 2.0 to 5.5 V	Ta = 25°C		–	2	4	μA
			Ta = 0° to 70°C		–	–	30	

Note: In standby mode with $\overline{CE1} \geqq V_{DD}$ – 0.2 V, these limits are assured for the condition CE2 $\geqq V_{DD}$ – 0.2 V or CE2 $\leqq$ 0.2 V.

CAPACITANCE (Ta = 25°C, f = 1 MHz)

SYMBOL	PARAMETER	TEST CONDITION	MAX	UNIT
C_{IN}	Input Capacitance	V_{IN} = GND	10	pF
C_{OUT}	Output Capacitance	V_{OUT} = GND	10	

Note: This parameter is periodically sampled and is not 100% tested.

AC CHARACTERISTICS AND OPERATING CONDITIONS (Ta = 0° to 70°C, V_{DD} = 5 V ± 10%)

READ CYCLE

SYMBOL	PARAMETER	TC551001BPL/BFL/BFTL/BTRL						UNIT
		-70L		-85L		-10L		
		MIN	MAX	MIN	MAX	MIN	MAX	
t_{RC}	Read Cycle Time	70	–	85	–	100	–	ns
t_{ACC}	Address Access Time	–	70	–	85	–	100	
t_{CO1}	Chip Enable ($\overline{CE1}$) Access Time	–	70	–	85	–	100	
t_{CO2}	Chip Enable (CE2) Access Time	–	70	–	85	–	100	
t_{OE}	Output Enable Access Time	–	35	–	45	–	50	
t_{COE}	Chip Enable Low to Output Active	10	–	10	–	10	–	
t_{OEE}	Output Enable Low to Output Active	5	–	5	–	5	–	
t_{OD}	Chip Enable High to Output High-Z	–	25	–	30	–	35	
t_{ODO}	Output Enable High to Output High-Z	–	25	–	30	–	35	
t_{OH}	Output Data Hold Time	10	–	10	–	10	–	

WRITE CYCLE

SYMBOL	PARAMETER	TC551001BPL/BFL/BFTL/BTRL						UNIT
		-70		-85		-10		
		MIN	MAX	MIN	MAX	MIN	MAX	
t_{WC}	Write Cycle Time	70	–	85	–	100	–	ns
t_{WP}	Write Pulse Width	50	–	60	–	60	–	
t_{CW}	Chip Enable to End of Write	60	–	75	–	80	–	
t_{AS}	Address Setup Time	0	–	0	–	0	–	
t_{WR}	Write Recovery Time	0	–	0	–	0	–	
t_{ODW}	R/W Low to Output High-Z	–	25	–	30	–	35	
t_{OEW}	R/W High to Output Active	5	–	5	–	5	–	
t_{DS}	Data Setup Time	30	–	35	–	40	–	
t_{DH}	Data Hold Time	0	–	0	–	0	–	

AC TEST CONDITIONS

Output load: 100 pF + one TTL gate
Input pulse level: 0.6 V, 2.4 V
Timing measurements: 1.5 V
Reference level: 1.5 V
t_R, t_F: 5 ns

TIMING DIAGRAMS

READ CYCLE (See Note 1)

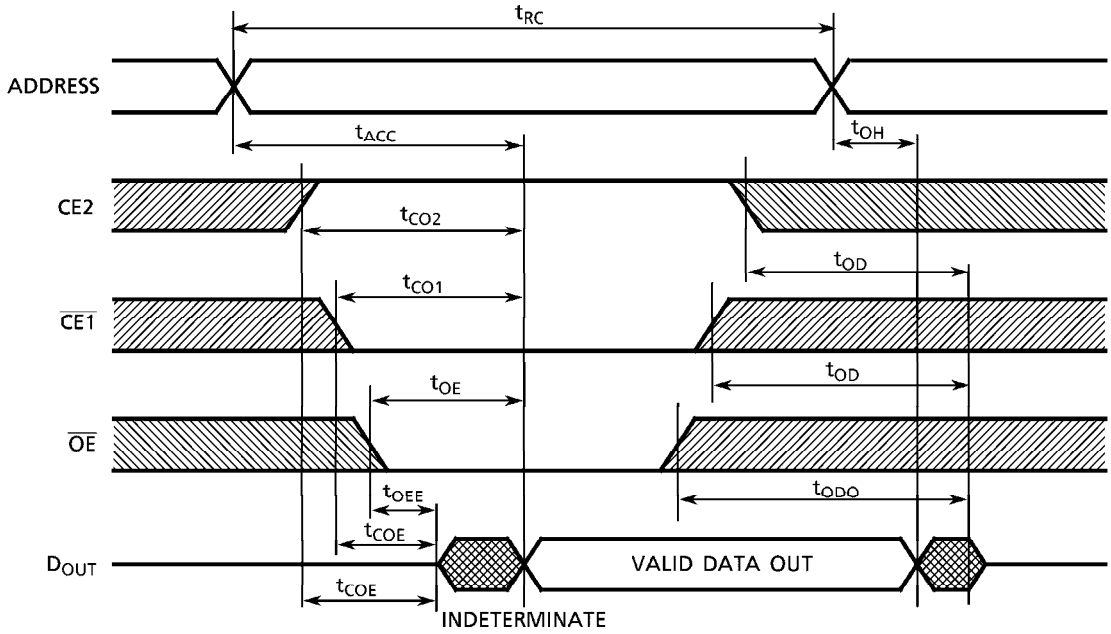

WRITE CYCLE 1 (R/W CONTROLLED) (See Note 4)

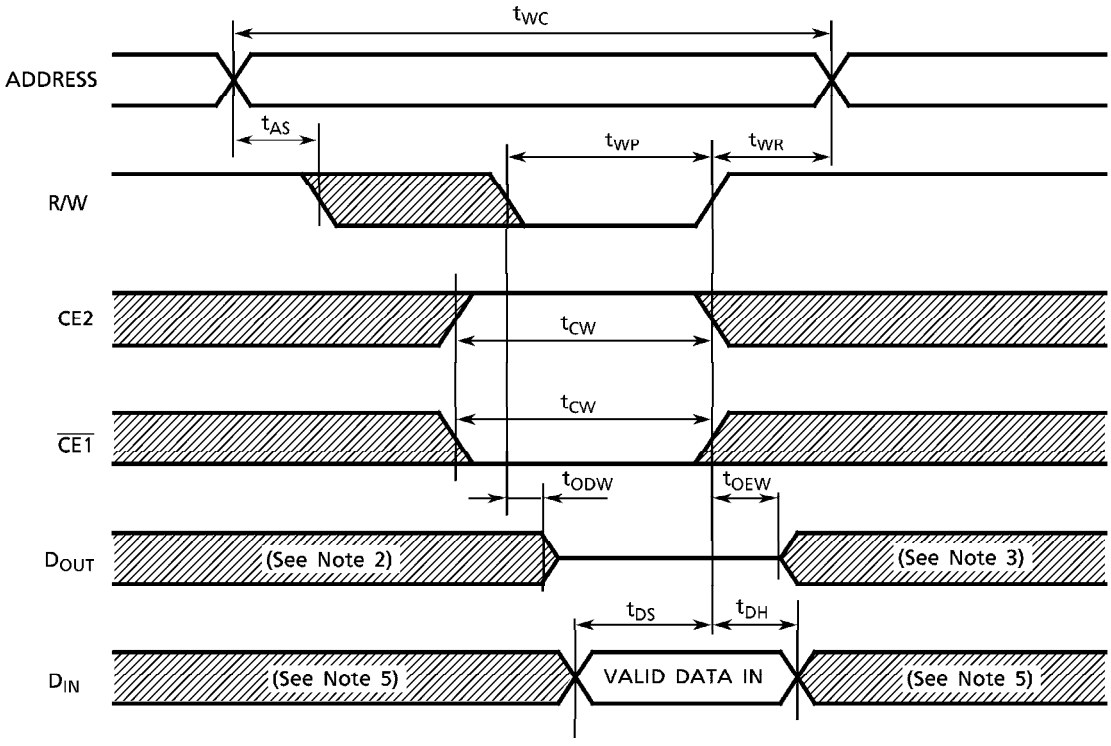

WRITE CYCLE 2 ($\overline{CE1}$ CONTROLLED) (See Note 4)

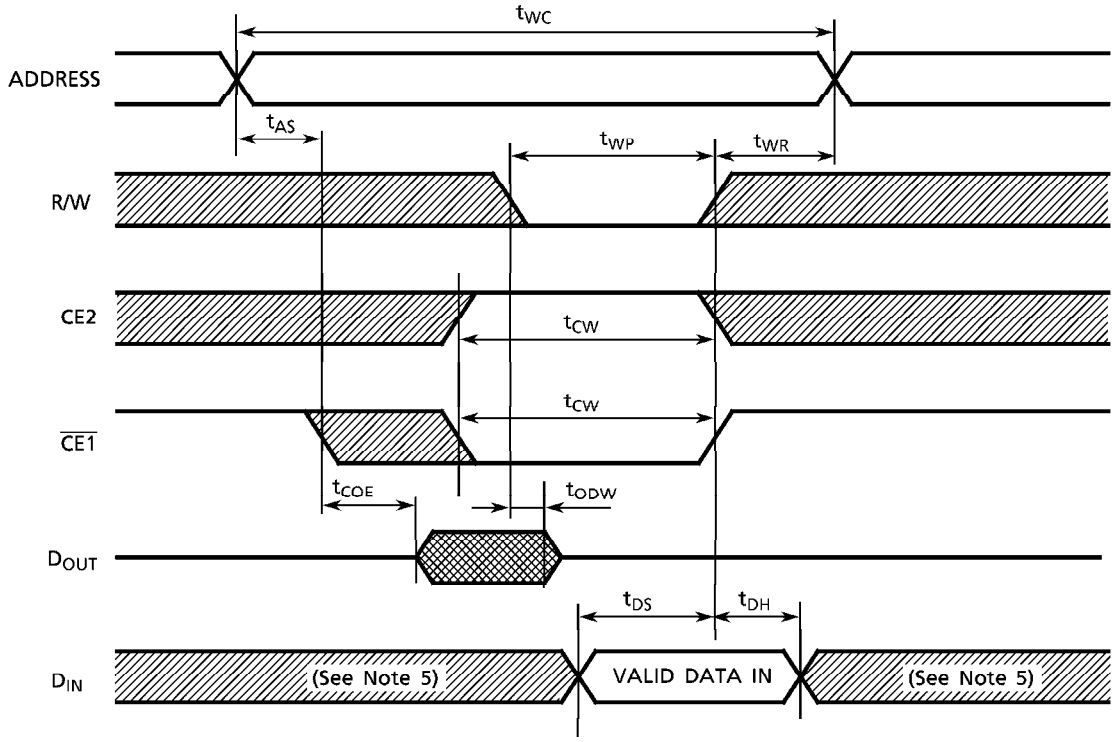

WRITE CYCLE 3 (CE2 CONTROLLED) (See Note 4)

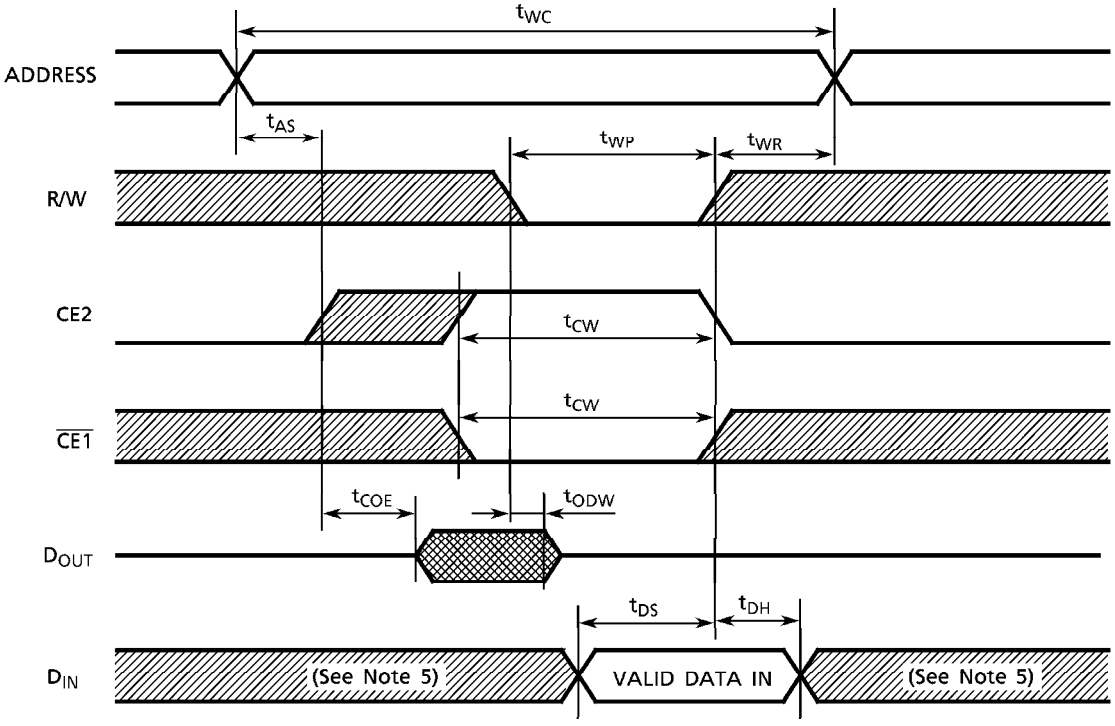

Note: (1) R/W remains HIGH for the read cycle.

(2) If $\overline{CE1}$ goes LOW (or CE2 goes HIGH) coincident with or after R/W goes LOW, the outputs will remain at high impedance.

(3) If $\overline{CE1}$ goes HIGH (or CE2 goes LOW) coincident with or before R/W goes HIGH, the outputs will remain at high impedance.

(4) If $\overline{OE}$ is HIGH during the write cycle, the outputs will remain at high impedance.

(5) Because I/O signals may be in the output state at this time, input signals of reverse polarity must not be applied.

DATA RETENTION CHARACTERISTICS (Ta = 0° to 70°C)

SYMBOL	PARAMETER		MIN	TYP	MAX	UNIT
V_{DH}	Data Retention Supply Voltage		2.0	–	5.5	V
I_{DDS2}	Standby Current	V_{DH} = 3.0 V	–	–	15*	μA
		V_{DH} = 5.5 V	–	–	30	
t_{CDR}	Chip Deselect to Data Retention Mode Time		0	–	–	nS
t_R	Recovery Time		5	–	–	mS

* 3 μA (max) at Ta = 0° to 40°C

$\overline{CE1}$ CONTROLLED DATA RETENTION MODE (See Note 1)

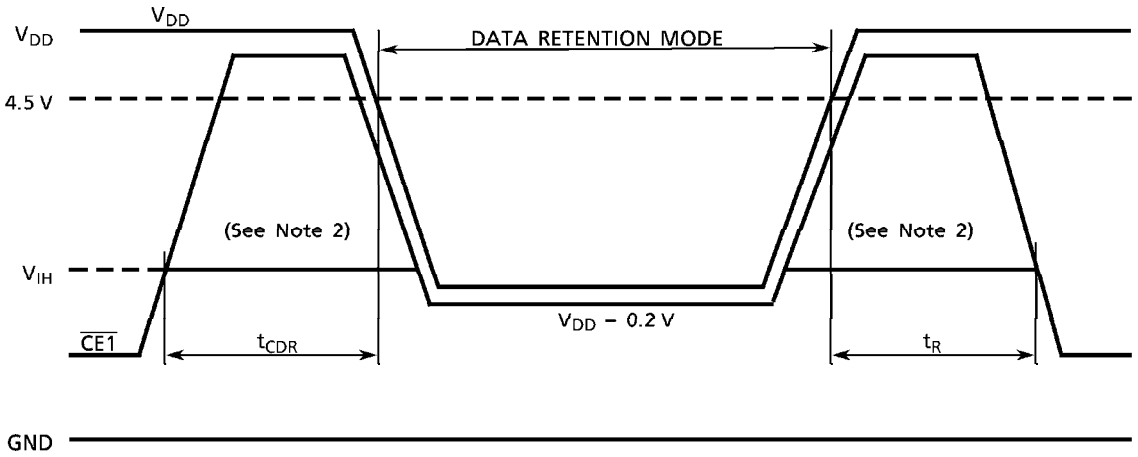

CE2 CONTROLLED DATA RETENTION MODE (See Note 3)

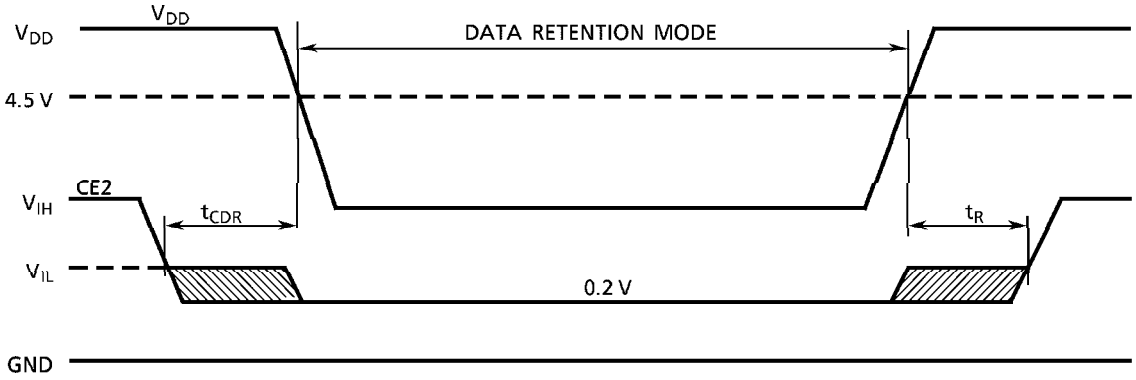

Note: (1) In $\overline{CE1}$ controlled data retention mode, minimum standby current mode is entered when CE2 $\leqq$ 0.2 V or CE2 $\geqq$ V_{DD} − 0.2 V.

(2) When $\overline{CE1}$ is operating at the V_{IH} level (2.2 V), the operation current is given by I_{DDS1} during the transition of V_{DD} from 4.5 to 2.4 V.

(3) In CE2 controlled data retention mode, minimum standby current mode is entered when CE2 $\leqq$ 0.2 V.

PACKAGE DIMENSIONS (DIP32-P-600)

Units in mm

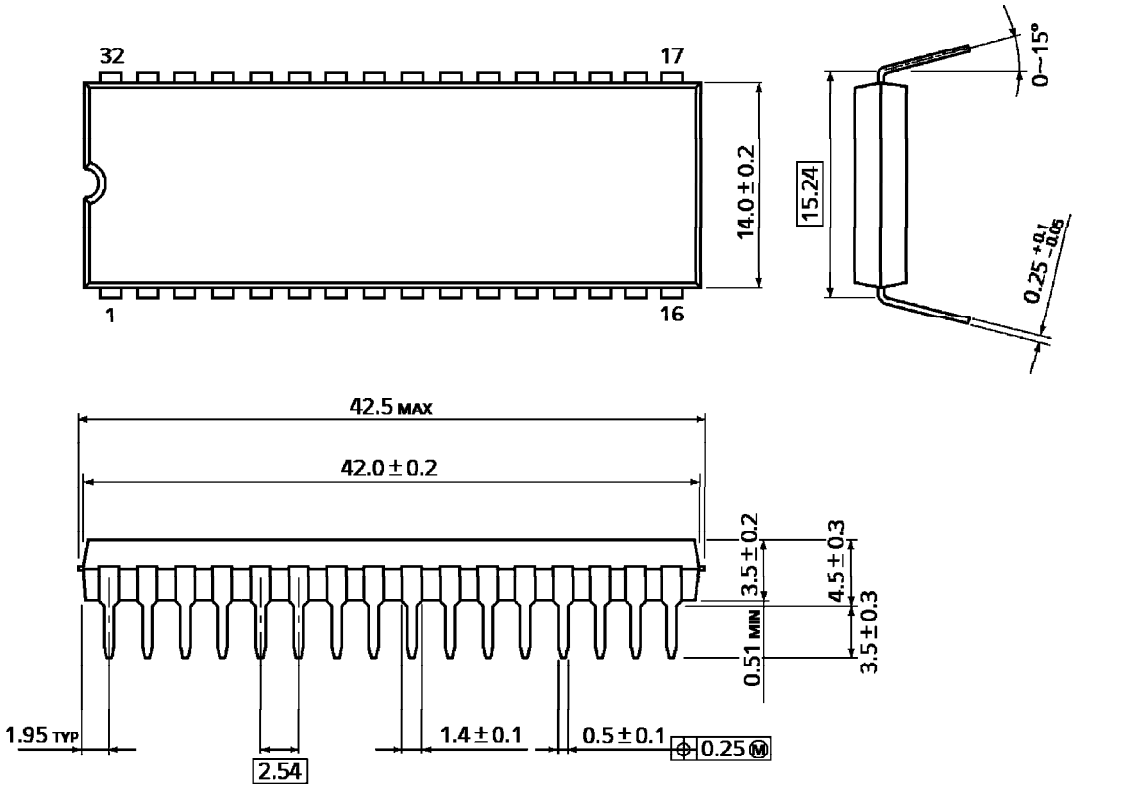

Weight: 4.45 g (typ)

PACKAGE DIMENSIONS (SOP32-P-525)

Units in mm

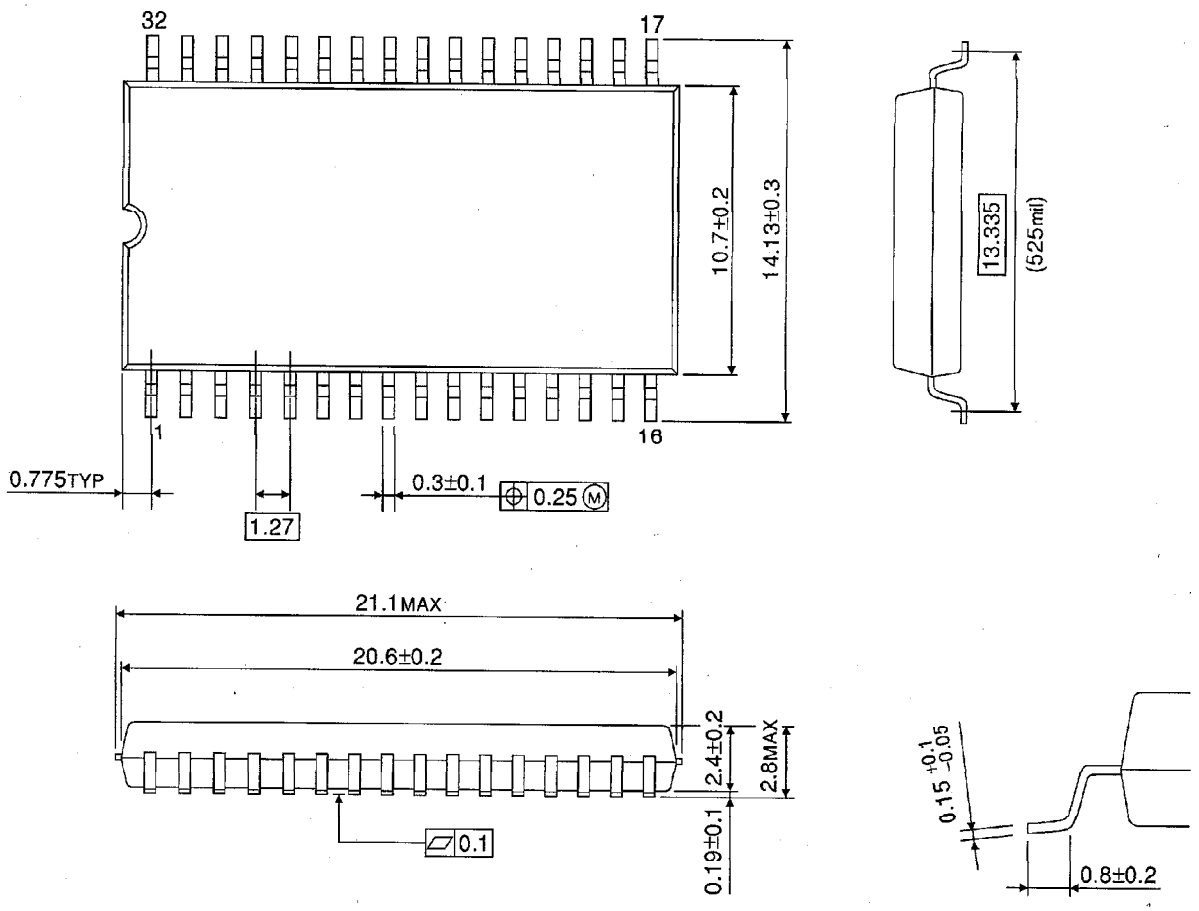

Weight: 1.04 g (typ)

PACKAGE DIMENSIONS (TSOP32-P-0820)

Units in mm

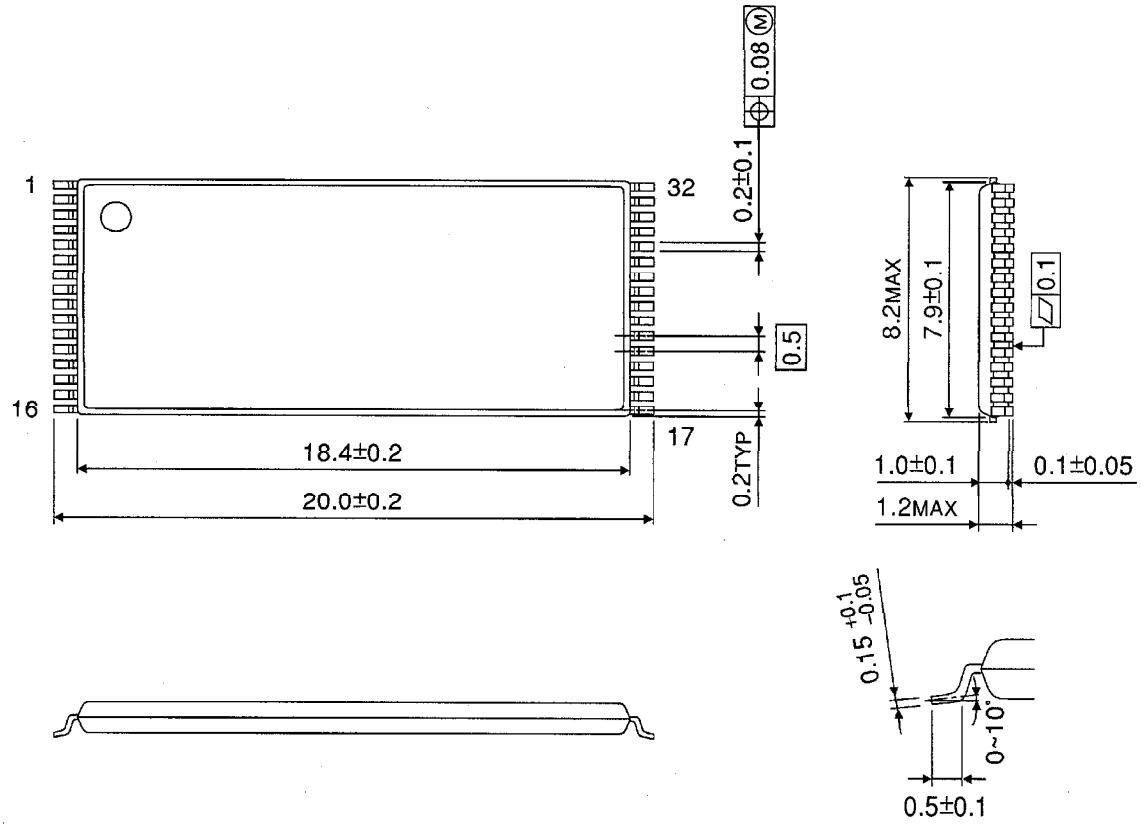

Weight: 0.34 g (typ)

PACKAGE DIMENSIONS (TSOP32-P-0820A)

Units in mm

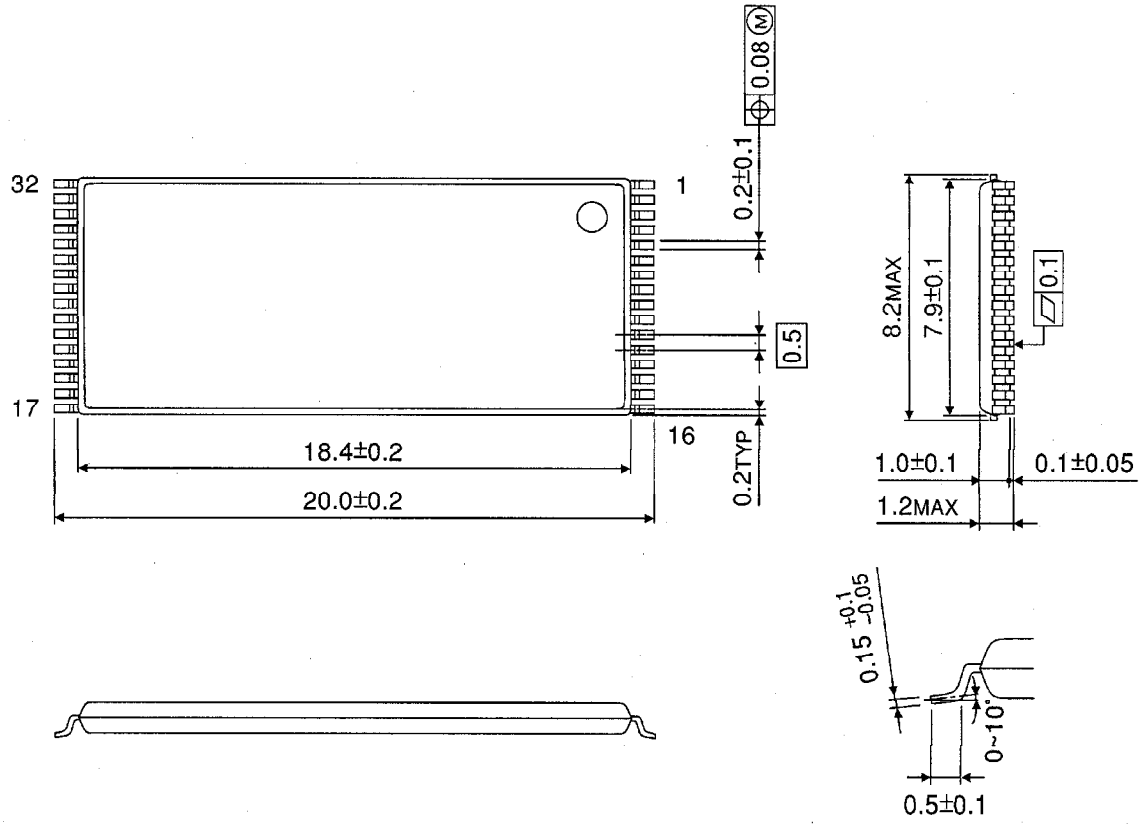

Weight: 0.34 g (typ)