Brand of NTN corporation

Technical data

UCFCE207

Bearing units



Grey cast housing, radial insert ball bearing with socket set screws,seal with slinger

KIT CONTENT

UC207G2, FCE207

VISUAL (S)

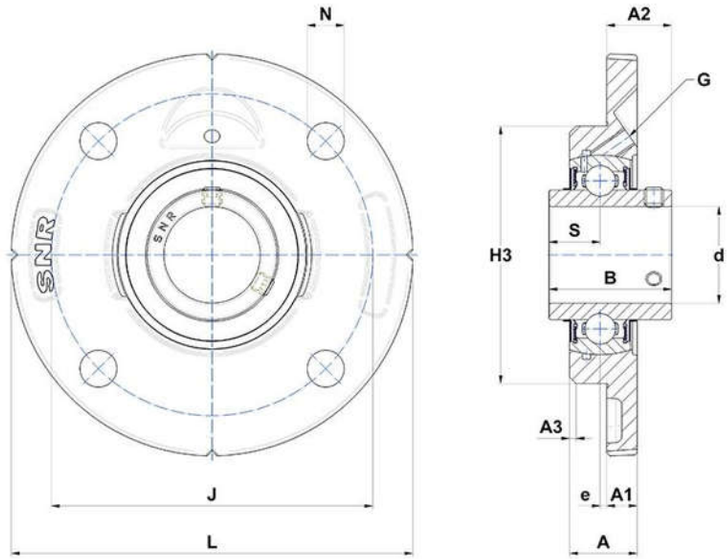

PRODUCT DEFINITION

Brand	SNR
A - Housing height	21 mm
A1 - Housing foot height / flange height	10 mm
A2 - Total height from mounting surface	24,4 mm
A3 - Centering depth / chamfer dimension	2 mm
B - Width of Inner Ring	42,9 mm

PRODUCT DEFINITION	
d - Shaft diameter	35 mm
e - Distance mounting surface to bearing center	-1 mm
G - Grease fitting	M6x1
H3 - Centering dia	90 mm
J - Mounting holes distance	110 mm
L - Housing width / diameter	135 mm
N - Mounting hole dimension	11,5 mm
S - Distance front side/bearing centre	17,5 mm

PRODUCT PERFORMANCE	
C - Dynamic load rating	25700000 mN
C0 - Static load rating	15200000 mN
Operating temperature min.	253,15 °K
Operating temperature max.	373,15 °K

OTHER FEATURES	
Mass	1,24 kg
Recommended tightening torque for set screw	11.5 N-m