Original instructions

Smile

Emergency stop with indication

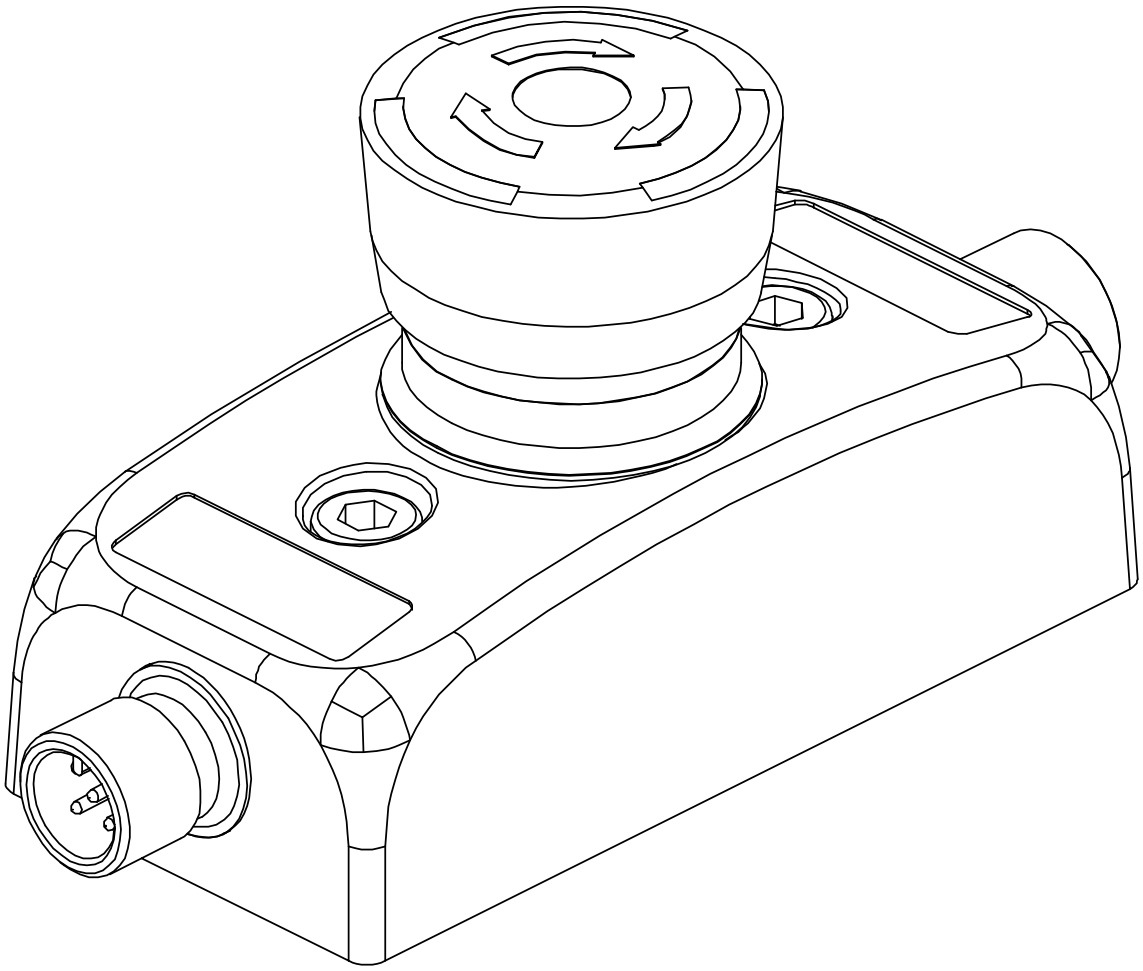

ABB Jokab Safety Varlabergsvägen 11, SE-434 39 Kungsbacka, Sweden
www.abb.com/jokabsafety

Read and understand this document

Please read and understand this document before using the products. Please consult your ABB JOKAB SAFETY representative if you have any questions or comments.

WARRANTY

ABB JOKAB SAFETY's exclusive warranty is that the products are free from defects in materials and workmanship for a period of one year (or other period if specified) from date of sale by ABB JOKAB SAFETY.

ABB JOKAB SAFETY MAKES NO WARRANTY OR REPRESENTATION, EXPRESSED OR IMPLIED, REGARDING NON-INFRINGEMENT, MERCHANTABILITY, OR FITNESS FOR PARTICULAR PURPOSE OF THE PRODUCTS, ANY BUYER OR USER ACKNOWLEDGES THAT THE BUYER OR USER ALONE HAS DETERMINED THAT THE PRODUCTS WILL SUITABLY MEET THE REQUIREMENTS OR THEIR INTENDED USE. ABB JOKAB SAFETY DISCLAIMS ALL OTHER WARRANTIES, EXPRESSED OR IMPLIED.

LIMITATIONS OF LIABILITY

ABB JOKAB SAFETY SHALL NOT BE RESPONSIBLE FOR SPECIAL, INDIRECT, OR CONSEQUENTIAL DAMAGES, LOSS OF PROFITS OR COMMERCIAL LOSS IN ANY WAY CONNECTED WITH THE PRODUCTS, WHETHER SUCH CLAIM IS BASED ON CONTRACT, WARRANTY, NEGLIGENCE, OR STRICT LIABILITY.

In no event shall responsibility of ABB JOKAB SAFETY for any act exceed the individual price of the product on which liability asserted.

IN NO EVENT SHALL ABB JOKAB SAFETY BE RESPONSIBLE FOR WARRANTY, REPAIR, OR OTHER CLAIMS REGARDING THE PRODUCTS UNLESS ABB JOKAB SAFETY'S ANALYSIS CONFIRMS THAT THE PRODUCTS WERE PROPERLY HANDLED, STORED, INSTALLED, AND MAINTAINED AND NOT SUBJECT TO ABUSE, MISUSE, OR INAPPROPRIATE MODIFICATION OR REPAIR.

SUITABILITY FOR USE

ABB JOKAB SAFETY shall not be responsible for conformity with any standards, codes, or regulations that apply to the combination of products in the customer's application or use of the product. At the customer's request, ABB JOKAB SAFETY will provide applicable third party certification documents identifying ratings and limitations of use that apply to the products. This information by itself is not sufficient for a complete determination of the suitability of the products in combination with the end product, machine, system, or other application or use.

The following are some examples of applications for which particular attention must be given. This is not intended to be an exhaustive list of all possible uses of the products, nor is it intended to imply that the uses listed may be suitable for the products:

Outdoor use, uses involving potential chemical contamination or electrical interference, or conditions or uses not described in this document.

Nuclear energy control systems, combustion systems, railroad systems, aviation systems, medical equipment, amusement machines, vehicles, and installations subject to separate industry or government regulations.

Systems, machines, and equipment that could present a risk to life or property.

Please know and observe all prohibitions of use applicable to the products.

NEVER USE THE PRODUCTS FOR AN APPLICATION INVOLVING SERIOUS RISK TO LIFE OR PROPERTY WITHOUT ENSURING THAT THE SYSTEM AS A WHOLE HAS BEEN DESIGNED TO ADDRESS THE RISKS, AND THAT THE ABB JOKAB SAFETY PRODUCT IS PROPERLY RATED AND INSTALLED FOR THE INTENDED USE WITHIN THE OVERALL EQUIPMENT OR SYSTEM.

PERFORMANCE DATA

While every effort has been taken to ensure the accuracy of the information contained in this manual ABB JOKAB SAFETY cannot accept responsibility for errors or omissions and reserves the right to make changes and improvements without notice. Performance data given in this document is provided as a guide for the user in determining suitability and does not constitute a warranty. It may represent the result of ABB JOKAB SAFETY'S test conditions, and the users must correlate it to actual application requirements. Actual performance is subject to the ABB JOKAB SAFETY Warranty and Limitations of Liability.

Table of Contents

1 Introduction 4

Scope 4

Audience 4

Prerequisites 4

Special notes 4

2 Overview 5

General description 5

Safety regulations 5

3 Connections 6

Connection examples 7

4 Installation and maintenance 11

Installation precautions 11

Maintenance 11

5 Operation 12

LED indication 12

6 Model overview 13

Accessories 13

7 Technical data 14

Dimensions 15

8 EC Declaration of conformity 16

1 Introduction

Scope

The purpose of these instructions is to describe the emergency stop Smile and to provide the necessary information required for installation and operation.

Audience

This document is intended for authorized installation personnel.

Prerequisites

It is assumed that the reader of this document has knowledge of the following:

- Basic knowledge of ABB Jokab Safety products.
- Knowledge of machine safety.

Special notes

Pay attention to the following special notes in the document:

⚠ **Warning!**	Danger of severe personal injury! An instruction or procedure which, if not carried out correctly, may result in injury to the technician or other personnel.
Caution!	Danger of damage to the equipment! An instruction or procedure which, if not carried out correctly, may damage the equipment.
NB:	Notes are used to provide important or explanatory information.

2 Overview

General description

In order to fulfil the need for a small and easy to install E-stop, Smile has been developed. The size of the device makes it possible to be installed wherever needed. With M12 connections or cable and centralized mounting holes. Smile is very easy to install, especially on aluminium extrusions. There are different versions available, either with one or two M12 connections or cable. Two M12 connectors are used to enable the connection of E-stops in series. On the top of the Smile E-stop unit, an LED indicates the status.

⚠ **Warning!** The emergency stop Smile normally needs to be complemented with other safety functions such as interlocking guards etc. Refer to risk analysis.

NB: The emergency stop shall **not** be used as normal stop of the machine, only in case of emergency.

Safety regulations

⚠ **Warning!**

Carefully read through this entire manual before using the device.

The devices shall be installed by a trained electrician following the Safety regulations, standards and the Machine directive.

Failure to comply with instructions, operation that is not in accordance with the use prescribed in these instructions, improper installation or handling of the device can affect the safety of people and the plant.

For installation and prescribed use of the product, the special notes in the instructions must be carefully observed and the technical standards relevant to the application must be considered.

In case of failure to comply with the instructions or standards, especially when tampering with and/or modifying the product, any liability is excluded.

3 Connections

Electrical connections - Smile

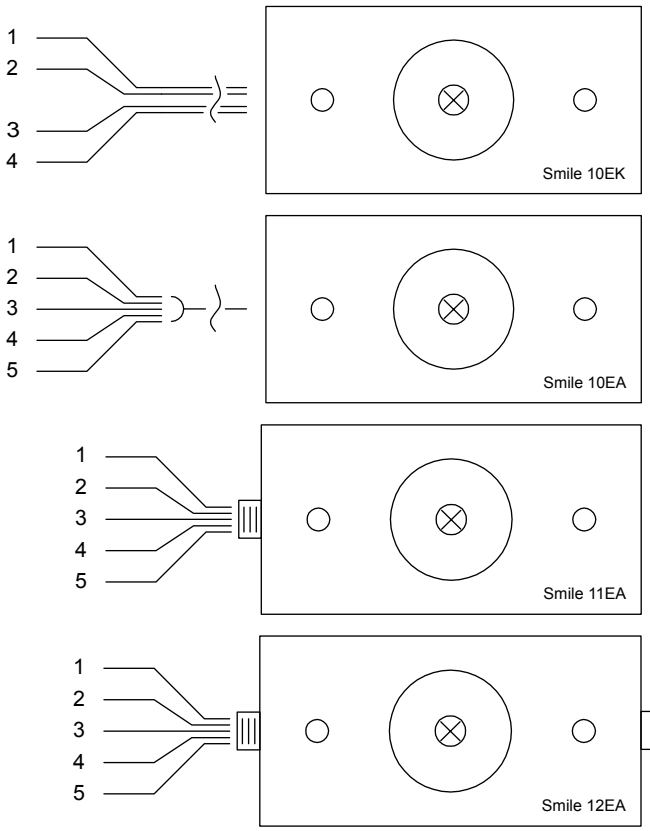

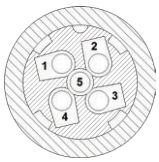

M12 5-pole male seen from cable side

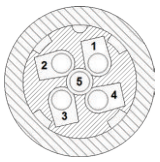

M12 5-pole female seen from cable side

Smile 10EA
5-pole wired

1) Brown: Input 1
2) White: Input 2
3) Blue: 0 VDC[1]
4) Black: Output 2
5) Grey: Output 1

Smile 10EK
4x wires

1) Input 1
2) Input 2
3) Output 2
4) Output 1

Smile 11EA
M12 5-pole male

1) Input 1
2) Input 2
3) 0 VDC[1]
4) Output 2
5) Output 1

Smile 12EA

Input
M12 5-pole male

1) Input 1
2) Input 2
3) 0 VDC[1]
4) Output 2, feedback
5) Output 1, feedback

Output
M12 5-pole female

1) Output 1
2) Output 2
3) 0 VDC
4) Input 2, feedback
5) Input 1, feedback

1. To be connected only if LED indication is required.

NB: Smile 10EA/11EA/12EA can be used with any safety PLC or safety relay, but if LED indication is required the voltage over pin-1 (+) and pin-3 (-) must be between 19.2 – 28.8 VDC.

Caution!

When connected to an ABB Jokab Safety safety relay (such as an RT6 or RT9) and voltage (+) is supplied from the output S13, a maximum of three Smile units may be connected in series. This must be done with caution (especially in warm environments) as this affects the heat generation within the safety relay.

If more than three units are connected in series, voltage (+) should be supplied from another source (e.g. A1).

Connection examples

Connection example – Smile 10EA

Smile 10EA can be connected to either Pluto or a safety relay. The connection cable exits from underneath the unit.

Single channel example with LED indication. Safety category 1

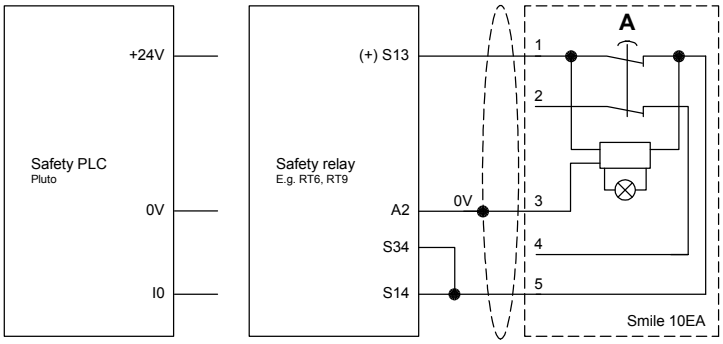

Two channel example with LED indication. Safety circuit category 4

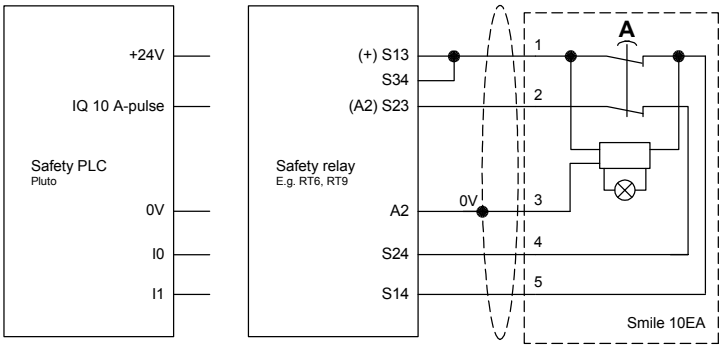

Connection example – Smile 11EA

Smile 11EA can be connected to either Pluto or a safety relay. Connection via M12 connector.

Single channel example with LED indication. Safety category 1

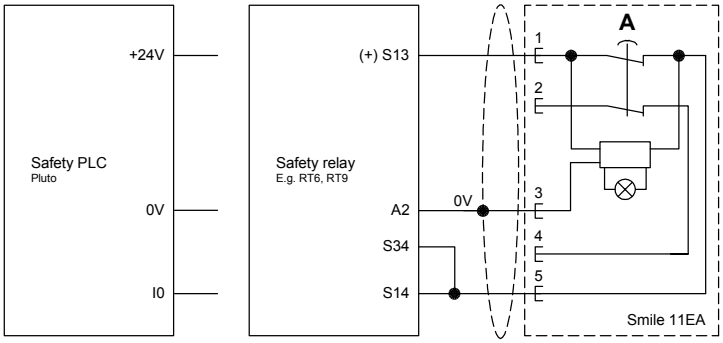

Two channel example with LED indication. Safety circuit category 4

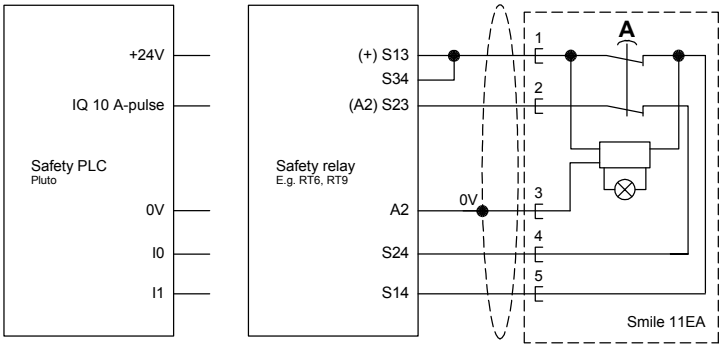

Connection example – Smile 12EA

Smile 12EA can be connected to either Pluto or a safety relay.

Single channel example with LED indication.

Safety category 1. Connection via M12 connector + termination connector.

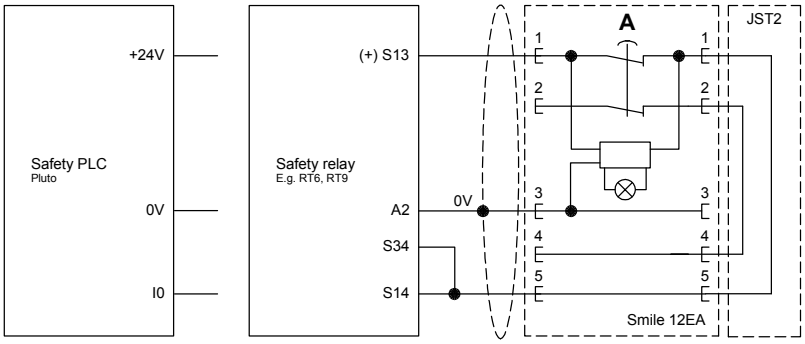

Two channel example with LED indication.

Safety circuit category 4. Connection via M12 connector + termination connector.

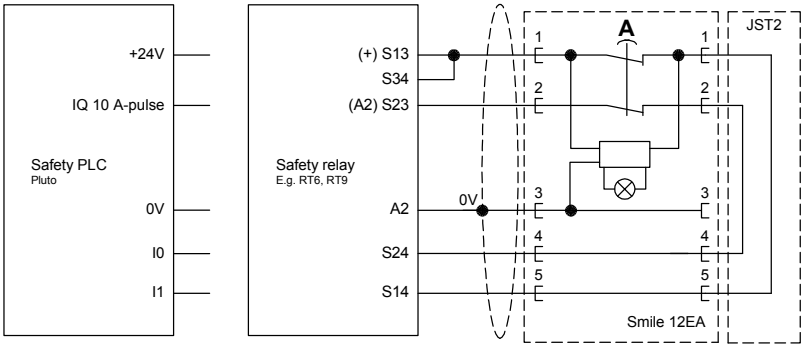

Two channel serial connection example with LED indication.

Safety circuit category 3. Connection via M12 connector + termination connector. Note that there is no termination connector for the Smile 12EA (C), this unit is being connected back to the Pluto/safety relay via a separate cable.

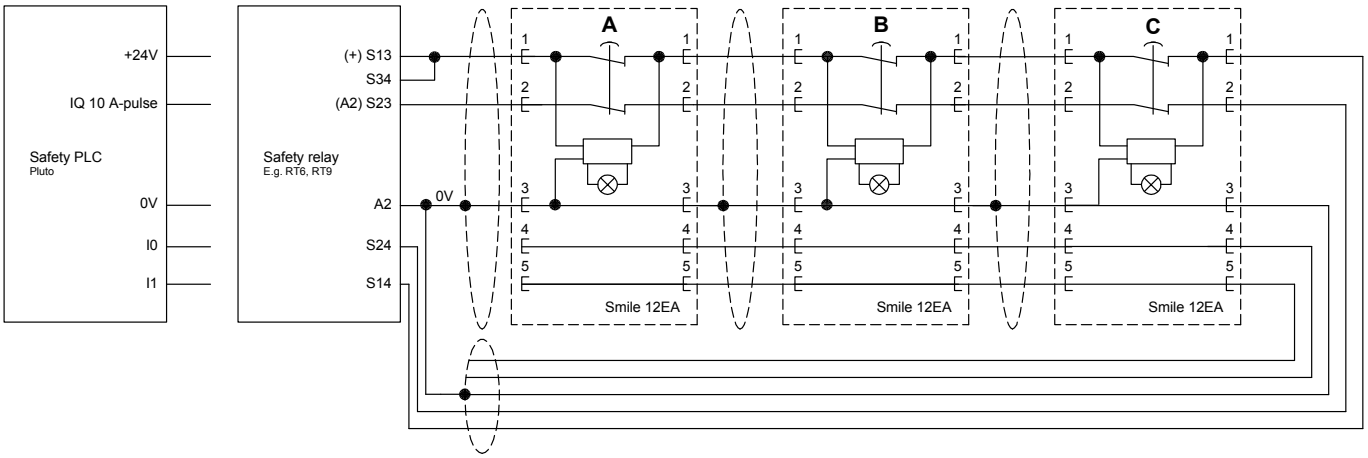

Connection example – Smile 11EA & -12EA

Both Smile 11EA and -12EA can be connected to either Pluto or a safety relay.

Two channel example with LED indication.

Safety category 3. Connection via M12 connectors. Note that there is no termination connector as the Smile 11EA (C) completes the circuit without the need for a termination connector (JST2) or return cable.

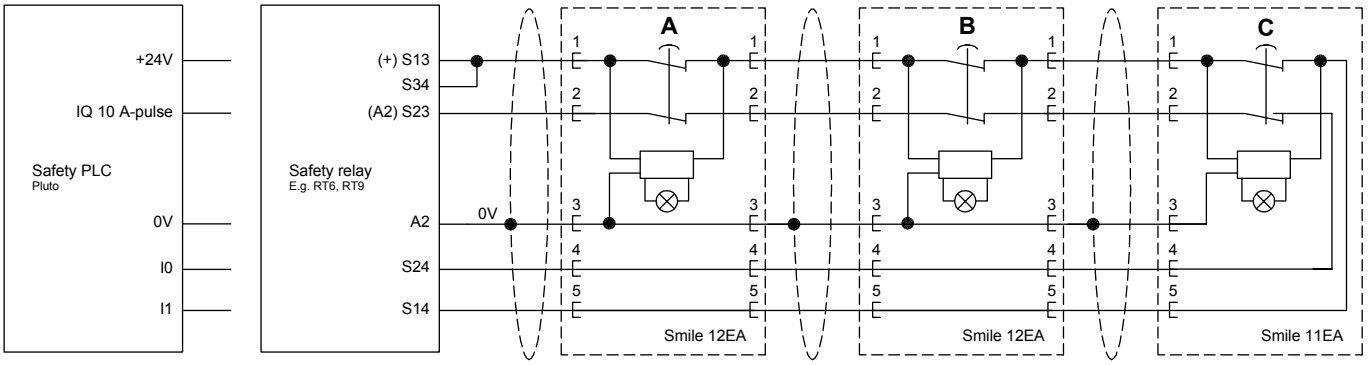

LED indication example

The table shows the LED indication status of the emergency stop actuators from the connection example above.

Emergency stop actuator status				LED indication		
A	**B**	**C**		**A**	**B**	**C**
Released	Released	Released	‹---›	Green	Green	Green
Released	Released	Pressed	‹---›	Green	Green	Red
Released	Pressed	Released	‹---›	Green	Red	OFF
Released	Pressed	Pressed	‹---›	Green	Red	OFF
Pressed	Released	Released	‹---›	Red	OFF	OFF
Pressed	Released	Pressed	‹---›	Red	OFF	OFF
Pressed	Pressed	Released	‹---›	Red	OFF	OFF
Pressed	Pressed	Pressed	‹---›	Red	OFF	OFF

NB: More information about the LED indication can be found in chapter *Operation*.

4 Installation and maintenance

Installation precautions

First mount Smile to the surface with two M5 bolts, and then attach the M12 connection(s).

⚠ **Warning!** All the safety functions must be tested before starting up the system.

Maintenance

⚠ **Warning!**

The safety functions and the mechanics shall be tested regularly, at least once every year to confirm that all the safety functions are working properly (EN 62061:2005).

In case of breakdown or damage to the product, contact the nearest ABB Jokab Safety Service Office or reseller. Do not try to repair the product yourself since it may accidentally cause permanent damage to the product, impairing the safety of the device which in turn could lead to serious injury to personnel.

5 Operation

⚠ **Warning!** The maximum number of operations (cycles) for the emergency stop Smile is 6050 operations.

LED indication

LED	Indication	Description
LED on button	Green	Safety device OK. Safety circuit closed.
	OFF	Safety circuit interrupted (when an emergency stop actuator is pressed down, all following units in the safety circuit lose the LED function).
	Red	Safety device actuator pressed down. Safety circuit interrupted.

6 Model overview

Type	Article number	Description
Smile 11EA	2TLA030051R0000	Emergency stop, red button, M12 5-pole male
Smile 11EAR	2TLA030051R0100	Emergency stop, red button, M12 5-pole male, reversed
Smile 12EA	2TLA030051R0200	Emergency stop, red button, M12 5-pole male, M12 5-pole female
Smile 10EA	2TLA030051R0400	Emergency stop, red button, 1 m cable (5-pole)
Smile 10EK	2TLA030051R0600	Emergency stop, red button, short leads (4x wires, no LED connection)
Smile 11SA	2TLA030051R0900	Safety stop, black button, M12 5-pole male
Smile 12SA	2TLA030051R1000	Safety stop, black button, M12 5-pole male, M12 5-pole female
Smile 11SAR	2TLA030051R1100	Safety stop, black button, M12 5-pole male, reversed

Smile 11EA

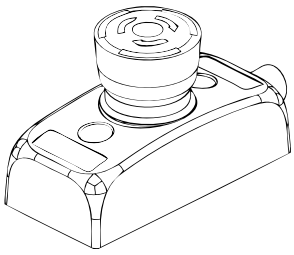

Smile 12EA

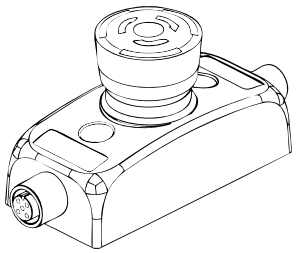

Smile 10EA

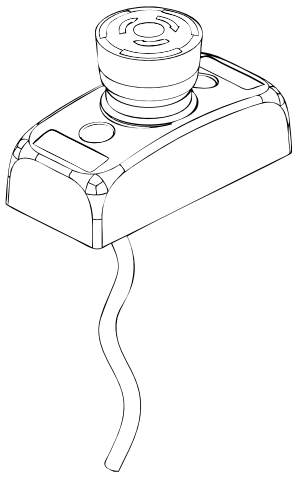

Smile 10EK

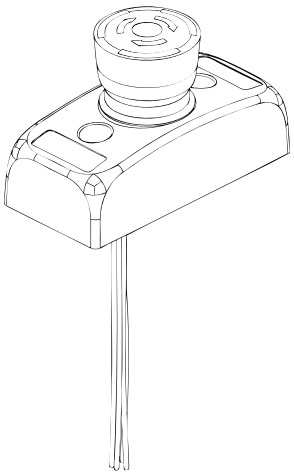

Smile 11EAR

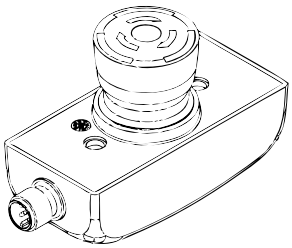

Accessories

Type	Article number	Description
JST2	2TLA030051R1300	Termination for Smile 12
Emergency stop sign	2TLA030054R0700	Ø32.5 mm, Swedish, Danish, Finnish. For reversed Smile.
Emergency stop sign	2TLA030054R0800	Ø32.5 mm, English, French, German. For reversed Smile.

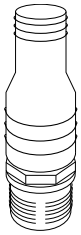

JST2
Termination for Smile 12

Article number:
2TLA030051R1300

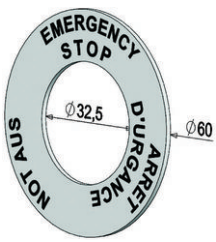

Emergency stop sign
For reversed Smile

Article number:
S, DK, FIN: 2TLA030054R0700
EN, F, D: 2TLA030054R0800

7 Technical data

Manufacturer	
Address	ABB JOKAB SAFETY Varlabergsvägen 11 SE-434 39 Kungsbacka Sweden

Power supply	
Operating voltage (LED)	17-27 VDC ±10 %
Current consumption (LED)	15 mA
Minimum current (switches)	10 mA 10 VDC/10 VAC
Maximum current (switches)	2 A 24 VDC

General	
Protection class	IP65
Ambient temperature	Storage: -30…+70°C Operation: -10…+55°C
Housing material	Polyamide PA66, Macromelt, polybutylenterephthalate PBT, Polypropene PP, UL 94 V0
Contact material	Silver alloy, gold plated
Connectors	Smile 10EA: 5-pole cable, 1 m Smile 10EK: 4x wires Smile 11x*: M12 5-pole male Smile 12x*: M12 5-pole male, M12 5-pole female * - x can be all models -EA, -EAR, -SA, -SAR
Size	84 x 40 x 52 (L x W x H) – see drawing
Weight	~ 65 g
Colour	Yellow base, red or black button
Actuator force (E-stop button)	22 ± 4N
Actuator travel	~ 4 mm to latch
Mechanical life	> 50,000 operations
Impact resistance (half sinusoidal)	Max. 150 m/s^2, pulse width 11 ms, 3-axis (as per EN IEC 60068-2-27)
Vibration resistance (half sinusoidal)	Max. 50m/s^2 at 10 Hz, 10 cycles, 3-axis (as per EN IEC 60068-2-6)

Climate resistance	
Damp heat, cyclical	96 hours, +25°C / 97%, +55°C / 93% relative humidity, as per EN IEC 60068-2-30
Damp heat, sustained	56 days, +40°C / 93% relative humidity, as per EN IEC 60068-2-78
Dry heat	96 hours, +70°C, as per EN IEC 60068-2-2
Cooling	96 hours, -40°C, as per EN IEC 60068-2-1
Salt mist	96 hours, +35°C in a chemical solution with NaCl as per EN IEC 60068-2-11

Safety-related characteristic data and Conformity	
Conformity	European Machinery Directive 2006/42/EC EN ISO 12100:2010, EN ISO 13849-1:2008, EN 62061:2005, EN 60204-1:2006+A1:2009, IEC 60664-1:2007, EN 61000-6-2:2005, EN 61000-6-4:2007, EN 60947-5-5:2005, EN ISO 13850:2006
EN ISO 13849-1	Up to PL e, cat. 4 depending on system architecture
Certificates	Inspecta
Safety data Mechanical reliability B10d	 Emergency stop: Fault exclusion, up to 6050 operations

NB: A safety function with an emergency stop Smile can achieve Cat. 4/PL e according to EN 954-1/EN ISO 13849-1 only when a single Smile unit is connected to the control unit (safety-PLC or safety relay) in a dual channel configuration.

Dimensions

Dimensions – Smile

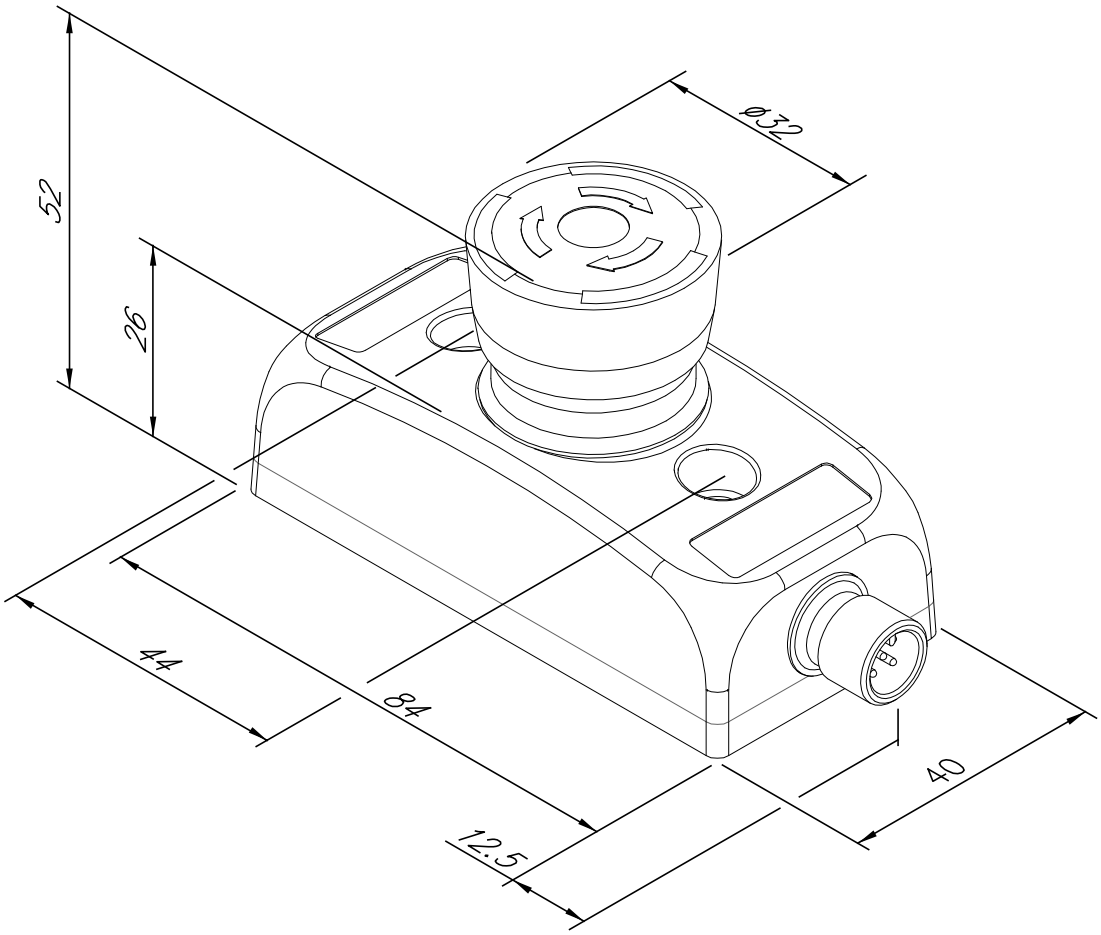

NB: All measurements in millimetres.

8 EC Declaration of conformity

EC Declaration of conformity

(according to 2006/42/EC, Annex2A)

We	ABB AB JOKAB SAFETY Varlabergsgatan 11 SE-434 39 Kungsbacka Sweden	declare that the safety components of ABB AB make with type designations and safety functions as listed below, is in conformity with the Directives 2006/42/EC 2006/95/EC
Authorised to compile the technical file		ABB AB JOKAB Safety Varlabergsgatan 11 SE-434 39 Kungsbacka Sweden

Product	**Certificate**
Emergency stop device Smile, versions 10EA, 10EAK, 11EA, 12EA, 11EAR	11-SKM-CM-0103
Emergency stop device INCA 1	11-SKM-CM-0103
Emergency stop wire Stop Line	
Emergency stop wire JSNY10	

Certification body	Inspecta Sweden AB Box 30100 SE-104 25 Stockholm Sweden
Used harmonized standards	EN ISO 12100:2010, EN ISO 13849-1:2008/AC:2009, EN 60204-1:2006+A1:2008, EN ISO 13850:2008

Jesper Kristensson
PRU Manager
Kungsbacka 2012-08-03

www.abb.com
www.jokabsafety.com

Original

ABB JOKAB SAFETY Varlabergsvägen 11, SE-434 39 Kungsbacka, Sweden

www.abb.com/jokabsafety