SCHAEFFLER

Self-aligning ball bearings 1205-K-TVH-C3 (Series 12..-K)

main dimensions to DIN 630, with tapered bore, taper 1:12

The datasheet is only an overview of dimensions and basic load ratings of the selected product. Please always observe all the guidelines in these overview pages. Further information is given on many products under the menu item "Description". You can also order comprehensive information via the Catalogue selection system (https://www.schaeffler.de/content.schaeffler.de/en/news_media/index.jsp) or by telephone on +49 (91 32) 82 - 28 97.

d	25	mm
D	52	mm
B	15	mm
D_1	43,6	mm
d_1	33,3	mm
$D_{a\ max}$	46,4	mm
$d_{a\ max}$	32	mm
$d_{a\ min}$	30,6	mm
$r_{a\ max}$	1	mm
r_{min}	1	mm

m	0,135 kg	Mass
C_r	12300 N	Basic dynamic load rating, radial
C_{0r}	3300 N	Basic static load rating, radial
C_{ur}	209 N	Fatigue limit load, radial
n_G	15500 1/min	Limiting speed
$n_{\vartheta r}$	13400 1/min	Reference speed
e	0,27	
Y_1	2,37	
Y_2	3,66	
Y_0	2,48	
	H205	Designation, adapter sleeve

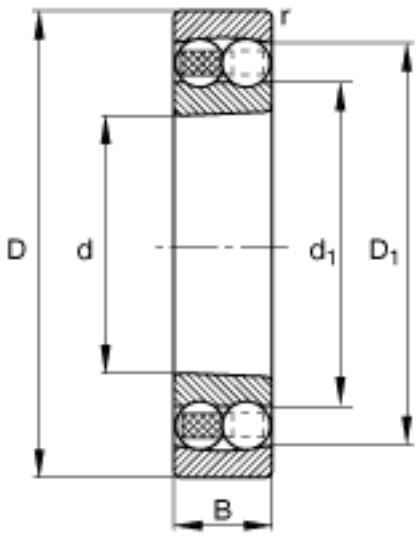
r
D
d
d_1
D_1
B

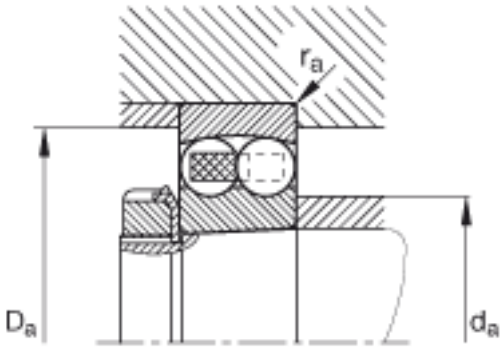
r_a
D_a
d_a