

Image may differ from product. See technical specification for details.

NN 3038 K/SPW33

Super-precision double row cylindrical roller bearing with tapered bore and lubrication feature

Super-precision double row cylindrical roller bearings in the NN 30 series provide a unique balance between load carrying capacity, rigidity and speed. Having three flanges on the inner ring and no flanges on the outer ring, the bearings can accommodate axial displacement in both directions. The separable design simplifies mounting and

dismounting, particularly when load conditions require both rings to have an interference fit. The tapered bore enables accurate adjustment of clearance or preload during mounting.

- Very high radial load carrying capacity
- High rigidity and high running accuracy
- Minimize noise, vibration and heat generation
- Accommodate axial displacement in both directions
- Lubrication feature

Overview

Dimensions

Bore diameter	190 mm
Outside diameter	290 mm
Width	75 mm

Performance

Basic dynamic load rating	594 kN
Basic static load rating	1 080 kN
Attainable speed for grease lubrication	2 800 r/min
Attainable speed for oil-air lubrication	3 200 r/min

Properties

Bearing part	Complete bearing
Number of rows	2
Bore type	Tapered 1:12
Cage	Machined metal
Design	NN
Number of flanges, outer ring	0
Number of flanges, inner ring	3
Loose flange	None
Radial internal clearance	C1
Tolerance class	Class SP (SP)
Material, bearing	Bearing steel
Coating	Without
Sealing	Without
Lubricant	None
Relubrication feature	Annular groove and lubrication holes

Logistics

Product net weight	17.1 kg
eClass code	23-05-09-01
UNSPSC code	31171505

Technical specification

Bore type	Tapered 1:12

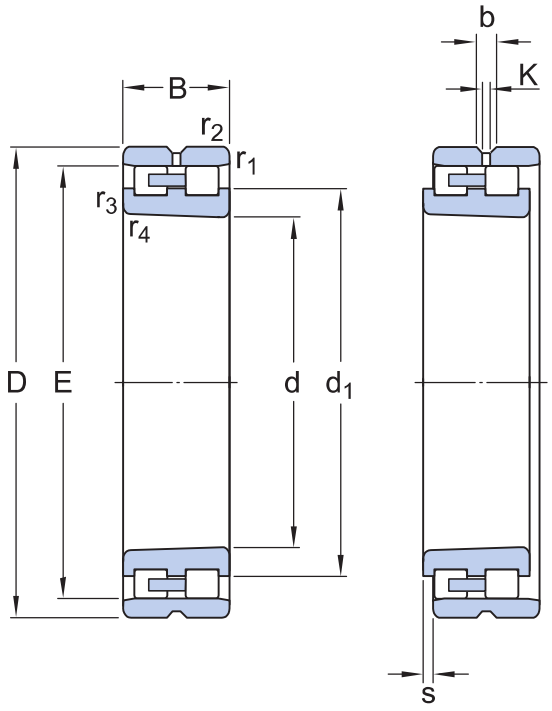

Dimensions

d	190 mm	Bore diameter
D	290 mm	Outside diameter
B	75 mm	Width
d_1	228.2 mm	Shoulder diameter inner ring (NN design)
E	265 mm	Raceway diameter outer ring (NN design)
b	11.35 mm	Width annular lubrication groove at outer ring
K	6 mm	Diameter lubrication hole (outer ring)
$r_{1,2}$	min. 2.1 mm	Chamfer dimension outer ring
$r_{3,4}$	min. 1.1 mm	Chamfer dimension inner ring (bearing with tapered bore)
s	max. 3 mm	Permissible axial displacement from the normal position of one bearing ring relative to the other (all)

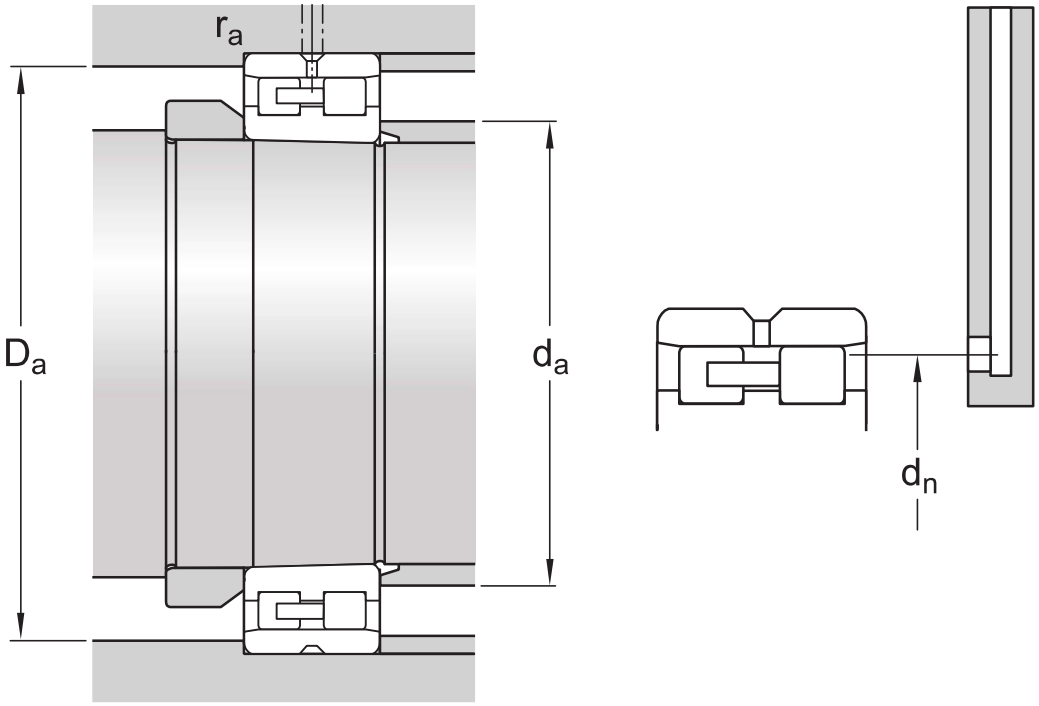

Abutment dimensions

d_a	min. 201 mm	Abutment diameter shaft
D_a	min. 267 mm	Abutment diameter housing
D_a	max. 279 mm	Abutment diameter housing
r_a	max. 2 mm	Fillet radius
d_n	258.9 mm	Oil nozzle position (not for variants with TNHA cage)

Calculation data

Basic dynamic load rating	C	594 kN
Basic static load rating	C_0	1 080 kN
Fatigue load limit	P_u	108 kN
Attainable speed for grease lubrication		2 800 r/min
Attainable speed for oil-air lubrication		3 200 r/min
Reference grease quantity	G_{ref}	144 cm^3
Static radial stiffness (guideline value)		4 280 N/µm

Tolerances and clearances

PRODUCT DETAILS

- Tolerances: SP, UP, SP and UP for 1:12 tapered bore
- Radial internal clearance: table

PRINCIPLES OF BEARING SELECTION AND APPLICATION

- Chamfer dimensions
- Seat tolerances for standard conditions: shafts, housings
- Values for ISO tolerance classes: shafts, housings
- Speed dependent initial grease fill → Initial grease fill

More Information

Product details

- Designs and variants
- General bearing specifications
- Preload, clearance, and stiffness
- Loads
- Attainable speeds
- Design considerations
- Mounting
- Designation system

Engineering information

- Principles of bearing selection and application
- General bearing knowledge
- Bearing selection process
- Bearing failure and how to prevent it

Tools

- SimPro Quick
- SimPro Spindle
- Bearing Frequency Calculator
- LubeSelect for SKF greases
- Heater selection tool

Terms of use

By accessing and using this website / app owned and published by AB SKF (publ.) (556007-3495 · Gothenburg) (“SKF”), you agree to the following terms and conditions:

Warranty Disclaimer and Limitation of Liability
Although every care has been taken to assure the accuracy of the information on this website / app, SKF provides this information "AS IS" and DISCLAIMS ALL WARRANTIES, EXPRESS OR IMPLIED, INCLUDING, BUT NOT LIMITED TO, IMPLIED WARRANTIES OF MERCHANTABILITY AND FITNESS FOR A PARTICULAR PURPOSE. You acknowledge that your use of this website / app is at your sole risk, that you assume full responsibility for all costs associated with use of this website / app, and that SKF shall not be liable for any direct, incidental, consequential, or indirect damages of any kind arising out of your access to, or use of the information or software made available on this website / app.

Any warranties and representations in this website / app for SKF products or services that you purchase or use will be subject to the agreed upon terms and conditions in the contract for such product or service.

Further, for non-SKF websites / apps that are referenced in our website / app or where a hyperlink appears, SKF makes no warranties concerning the accuracy or reliability of the information in these websites / apps and assumes no responsibility for material created or published by third parties contained therein. In addition, SKF does not warrant that this website / app or these other linked websites / apps are free from viruses or other harmful elements.

Third Party Services
When viewing YouTube content via the SKF website(s) (i.e. using YouTube API Services), you agree to be bound by the YouTube Terms of Service.

Copyright
Copyright in this website / app copyright of the information and software made available on this website / app rest with SKF or its licensors. All rights are reserved. All licensed material will reference the licensor that has granted SKF the right to use the material. The information and software made available on this website / app may not be reproduced, duplicated, copied, transferred, distributed, stored, modified, downloaded or otherwise exploited for any commercial use without the prior written approval of SKF. However, it may be reproduced, stored and downloaded for use by individuals without prior written approval of SKF. Under no circumstances may this information or software be supplied to third parties.

This website /app includes certain images used under license from Shutterstock, Inc.

Trademarks and Patents
All trademarks, brand names, and corporate logos displayed on the website / app are the property of SKF or its licensors, and may not be used in any way without prior written approval by SKF. All licensed trademarks published on this website / app reference the licensor that has granted SKF the right to use the trademark. Access to this website / app does not grant to the user any license under any patents owned by or licensed to SKF.

Changes
SKF reserves the right to make changes or additions to this website / app at any time.