890 LED Beacon/LED Traffic Light



LED Permanent Beacon



LED Traffic Light Combination with mounting bracket (accessory)



Clear lenses ensure signalling effect even in direct sunlight

- LED Beacon for traffic light combinations
- Clear signalling effect even in direct sunlight
- Maintainance-free LED technology
- Innovative fixing bracket for simple mounting

TECHNICAL SPECIFICATIONS:

Life duration up to 50,000 hrs

Dimensions (Ø x Height):	150 mm x 154 mm
Housing:	PC/ABS-Blend, grey
Lens:	PC, transparent
Fixing:	Base mounting, bracket mounting (accessory), tube mounting (accessory)
Connection:	Screw terminal max. 1.5 mm²
Installation position:	As required
Cable entry:	From top or bottom with cable gland M20 x 1.5 mm or from the back with rubber grommet Ø 6-12 mm, included in assembly.

ORDER SPECIFICATIONS:

Voltage	12-24 V DC	115 V AC	230 V AC
Current consumption	< 200 mA	< 35 mA	< 35 mA
red	**890 120 55**	**890 120 67**	**890 120 68**
green	**890 220 55**	**890 220 67**	**890 220 68**
yellow	**890 320 55**	**890 320 67**	**890 320 68**

ACCESSORIES:

FIXING BRACKET

Fixing bracket for one beacon	**975 890 33**
Fixing bracket for two beacons	**975 890 34**
Fixing bracket for three beacons	**975 890 35**
Fixing bracket for four beacons	**975 890 37**

Mounting material and connecting grommet included in assembly.
Further information can be found on page 178.

CONNECTING GROMMET

Connecting grommet for traffic light combinations	**975 890 25**

TUBE ADAPTOR

Adaptor for tube mounting (suitable for Ø 75 mm tubes, see page 195)	**975 890 36**

ADDITIONAL INFORMATION:

Traffic light configurator at **www.werma.com**

TECHNICAL DIAGRAMS: see page 326

See note on page 347

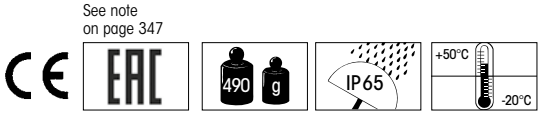



The LED Beacon 890 in combination with Multi-Tone Sounder 190 (see page 216)

890 Permanent/Traffic Light Beacon



Permanent Beacon

- Permanent Beacon for traffic light combinations
- Innovative fixing bracket for simple mounting
- Also with two bulb sockets for uniform safety, even in the case of bulb failure

TECHNICAL SPECIFICATIONS:

Dimensions (Ø x Height):	150 mm x 154 mm
Housing:	PC/ABS-Blend, grey
Lens:	PC, transparent
Socket:	E27 max. 25 W at 890 X00 00 2 sockets each E14 with max. 15 W at 890 X10 00 with adhesive stickers E27 max. 15 W
Fixing:	Base mounting, fixing bracket (accessory), tube mounting (accessory)
Connection:	Screw-free clamp mechanism max. 1.5 mm²
Cable entry:	From top or bottom with cable gland M20 x 1.5 mm or from the back with rubber grommet Ø 6-12 mm, included in assembly



Traffic Light Combination with mounting bracket (accessory)

ORDER SPECIFICATIONS:

PERMANENT BEACON

Voltage	12-240 V AC/DC
red	**890 100 00**
green	**890 200 00**
yellow	**890 300 00**
clear	**890 400 00**
blue	**890 500 00**

PERMANENT BEACON WITH 2 SOCKETS (INCL. REFLECTOR)

Voltage	12-240 V AC/DC
red	**890 110 00**
green	**890 210 00**
yellow	**890 310 00**

Further colours and voltages on request.



Permanent beacon with two sockets

ADDITIONAL INFORMATION:

Please also see LED Beacon/LED Traffic Light 890 with additional advantages (see p. 175)

- Maintenance-free LED technology
- Life duration up to 50,000 hrs
- Clear signalling effect even in direct sunlight

Traffic light configurator at **www.werma.com**

ACCESSORIES: see next page

See note on page 347

WERMA SIGNALTECHNIK



Beacon 890 in combination with Multi-Tone Sounder 190 (see page 216)



The adaptor (accessory) allows quick and simple mounting on a tube (Ø 75 mm)



890 with adhesive sticker (accessory)

ACCESSORIES:

FIXING BRACKET

Fixing bracket for one beacon	**975 890 33**
Fixing bracket for two beacons	**975 890 34**
Fixing bracket for three beacons	**975 890 35**
Fixing bracket for four beacons	**975 890 37**

Mounting material and connecting grommet included in assembly.
Further information can be found on page 178.

CONNECTING GROMMET

Connecting grommet for traffic light combinations	**975 890 25**

TUBE ADAPTOR

Adaptor for tube mounting (suitable for Ø 75 mm tubes)	**975 890 36**

REFLECTOR

Additional reflector for 890 X00 00	**975 890 02**

BULBS

LED bulb E27, 24 V	**956 X20 75**
LED bulb E27, 115 V	**956 X20 67**
LED bulb E27, 230 V	**956 X20 68**

X see page 167.

Bulb E27, 24 V / 25 W	**955 890 55**
Bulb E27, 115 V / 25 W	**955 890 67**
Bulb E27, 230 V / 25 W	**955 890 68**
Bulb E14, 230 V / 15 W	**955 890 38**

ADHESIVE STICKERS:

→	**975 890 52**
STOP	**975 890 53**
START	**975 890 54**
↯	**975 890 64**
✋	**975 890 65**



TECHNICAL DIAGRAMS:

see page 326

890 Fixing bracket for 890/190



Fixing bracket for
(LED) Beacons 890
and Multi-Tone Sounder 190

- Beacon/Traffic Light can be completely pre-assembled on the fixing bracket and connected before attachment
- Easy mounting in just a few steps
- Also suitable for Multi-Tone Sounder 190
- High Protection rating IP 65

TECHNICAL SPECIFICATIONS:

Material Fixing bracket:	PC/ABS-Blend
Material Connecting Grommet:	PA 6.6
Assembly:	Fixing bracket with mounting material and connecting grommet Beacon not included in assembly.
Suitable for:	LED Beacon/LED Traffic Light 890 (see page 175) Permanent/Traffic Light Beacon 890 (see page 176) Multi-Tone Sounder 190 (see page 253)

ORDER SPECIFICATIONS:

Fixing bracket for one beacon	**975 890 33**
Fixing bracket for two beacons	**975 890 34**
Fixing bracket for three beacons	**975 890 35**
Fixing bracket for four beacons	**975 890 37**



The fixing bracket can be mounted
pointing inwards or outwards

NEW FIXING BRACKET FOR SIMPLE MOUNTING:

Method No. 1

- Attach the bracket to the wall
- Connect the pre-assembled Traffic Light/Multi-Tone Sounder
- Tighten the nuts on both sides

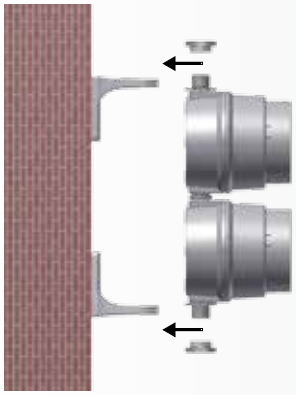

Method No. 2

- Connect and assemble the Traffic Light
- Attach the Traffic Light/Multi-Tone Sounder to the bracket and tighten the nuts on both sides
- Attach the complete bracket and Traffic Light/Multi-Tone Sounder to the wall

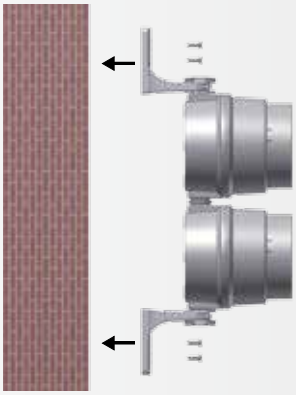

TECHNICAL DIAGRAMS:

see page 326



WERMA SIGNALTECHNIK

894 LED Traffic Light



LED Traffic Light (3 tier)



The direction of the optical signal can be individually adjusted



Clear lenses ensure signalling effect even in direct sunlight

- High visibility LED Traffic Light in an innovative, award-winning design
- Clear signalling even in direct sunlight thanks to clear lenses
- Simple mounting due to integrated mounting bracket
- Very good sideward visibility
- Protection rating IP 65/IP 69k

Life duration up to 50,000 hrs

TECHNICAL SPECIFICATIONS:

Dimensions (L x H x W):	2 tier: 85 mm x 309 mm x 136 mm 3 tier: 85 mm x 394 mm x 136 mm
Housing:	PC/ABS, grey
Lens:	PC, transparent
Fixing:	Wall mounting, tube mounting (accessory)
Installation position:	Vertical/hanging
Connection:	Screw terminal with wire protection max. 1.5 mm²
Cable entry:	Cable diameter max. 13 mm
Duty cycle:	100 %

ORDER SPECIFICATIONS:

Voltage	24 V DC	115-230 V AC
Current consumption	60 mA (red/yellow) 120 mA (green)	30 mA per tier at 230 V/50 Hz
red / green	**894 160 55**	**894 160 68**
red / yellow / green	**894 180 55**	**894 180 68**

ACCESSORIES:

Fixing bracket underneath	**975 894 01**
Adaptor for tube mounting (suitable for Ø 75 mm tubes, see page 181)	**975 894 02**

ADDITIONAL INFORMATION:

"Small traffic light series" wins "iF product design award 2009"
WERMA has won the prestigious "iF product design award" for the design and production of its "small traffic light series".

Since its introduction in 1953, this design prize has been an enduring, renowned hallmark for "excellent" design.



High visibility LED Traffic Light with integrated siren see page 214

TECHNICAL DIAGRAMS:

see page 326

See note on page 347

2 tier 380 g

3 tier 410 g

IP65/ IP69k

+50°C -30°C

WERMA SIGNALTECHNIK

LED Beacon / LED Traffic Light



LED Beacon (1 tier)



The direction of the optical signal can be individually adjusted



The adaptor (accessory) allows quick and simple mounting on a tube

- High visibility LED Beacon/ Traffic Light in an innovative, award-winning design
- Colour intensive light effect thanks to LEDs in the same colour as the lenses
- Simple mounting due to integrated mounting bracket
- Very good sideward visibility
- Protection rating IP 65/IP 69k

Life duration up to 50,000 hrs

TECHNICAL SPECIFICATIONS:

Dimensions (L x H x W):	1 tier: 85 mm x 224 mm x 136 mm 2 tier: 85 mm x 309 mm x 136 mm 3 tier: 85 mm x 394 mm x 136 mm
Housing:	PC/ABS, grey
Lens:	PC, transparent
Fixing:	Wall mounting, tube mounting (accessory)
Installation position:	Vertical/hanging
Connection:	Screw terminal with wire protection max. 1.5 mm²
Cable entry:	Cable diameter max. 13 mm
Duty cycle:	100 %

ORDER SPECIFICATIONS:

Voltage	24 V DC	115-230 V AC
Current consumption	60 mA (red/yellow) 120 mA (green)	30 mA per tier at 230 V/50 Hz
red	**894 010 55**	**894 010 68**
green	**894 020 55**	**894 020 68**
yellow	**894 030 55**	**894 030 68**
red / green	**894 060 55**	**894 060 68**
red / yellow / green	**894 080 55**	**894 080 68**

ACCESSORIES:

Fixing bracket underneath	**975 894 01**
Adaptor for tube mounting (suitable for Ø 75 mm tubes)	**975 894 02**

ADDITIONAL INFORMATION:

Maximum flexibility

Thanks to the innovative bracket, the direction of the signal can be individually adjusted. After the bracket has been mounted, the customer can adjust the light direction to suit his requirements.

The LED traffic light can be turned through 360 degrees guaranteeing optimum visibility from all angles.



TECHNICAL DIAGRAMS:

see page 326

See note on page 347

1 tier 350 g | 2 tier 380 g | 3 tier 410 g | IP65/IP69k | +50°C / -30°C

Technical Diagrams

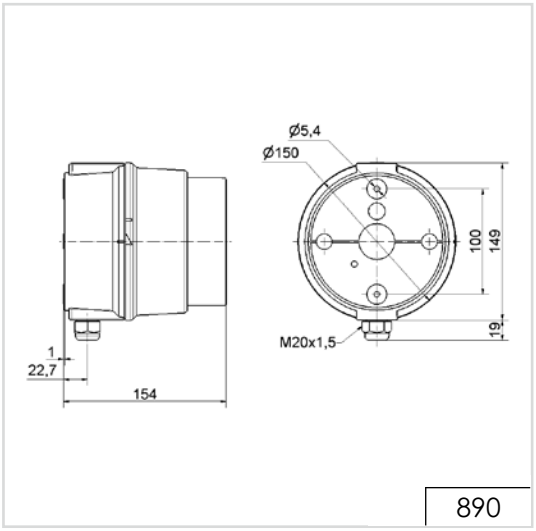

890

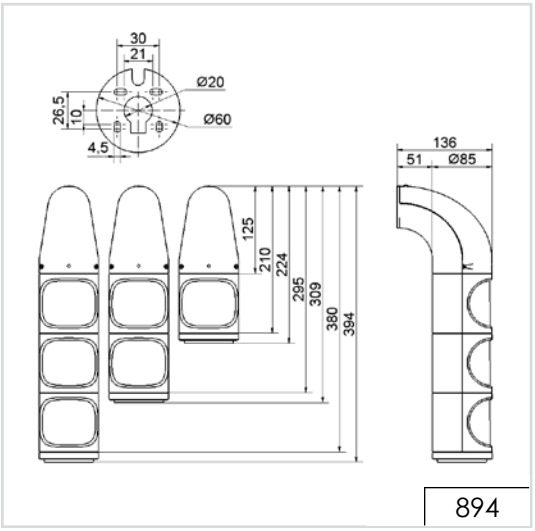

894

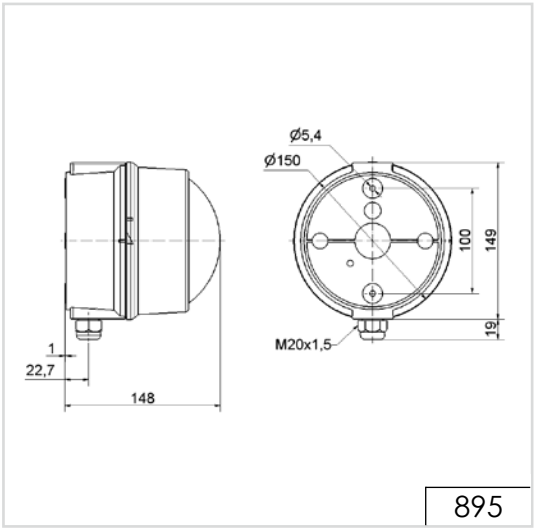

895

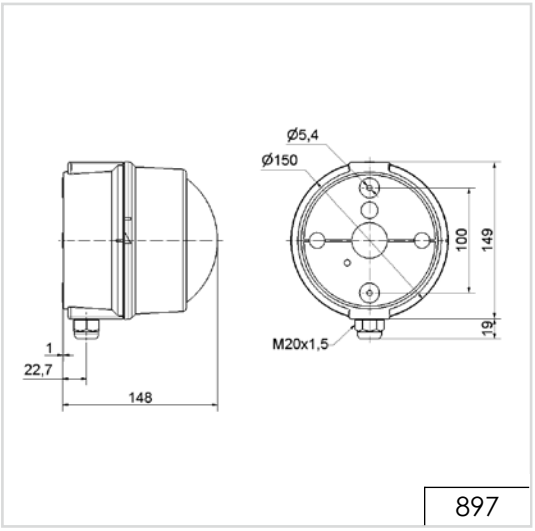

897

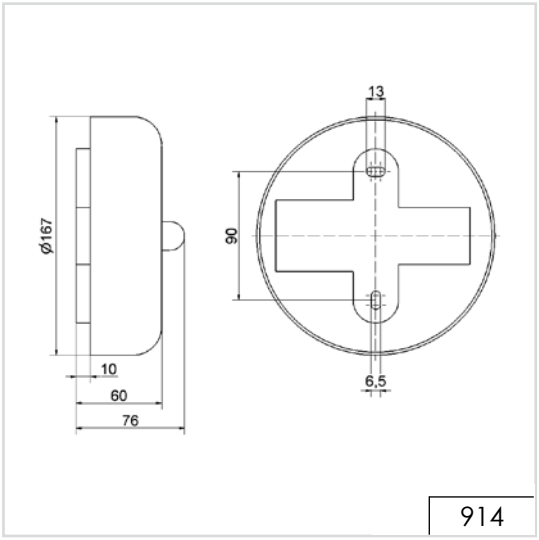

914

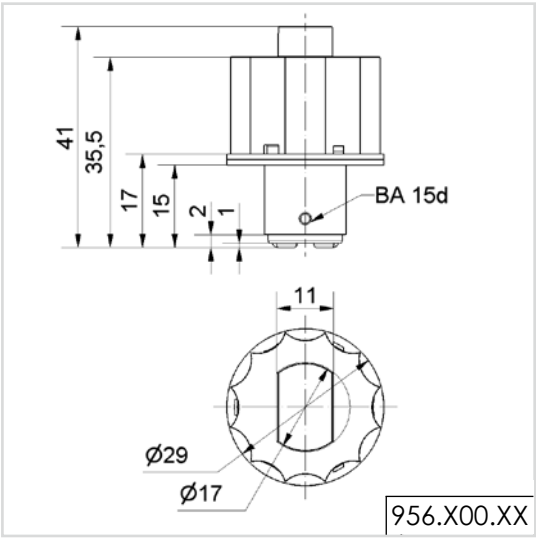

956.X00.XX

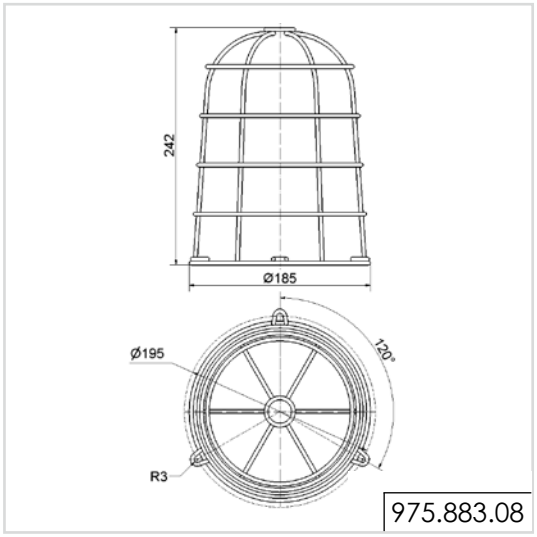

975.883.08

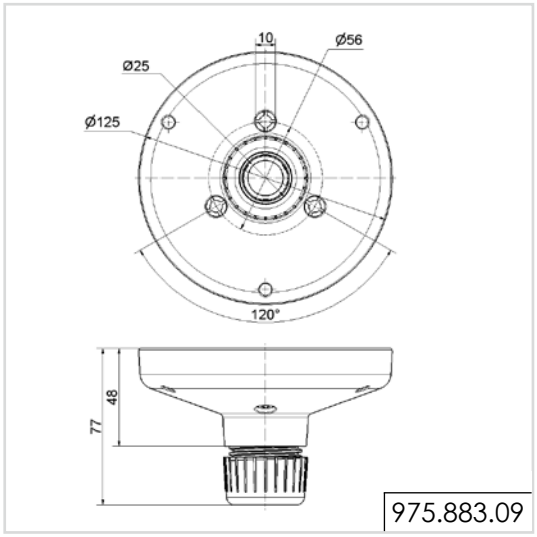

975.883.09

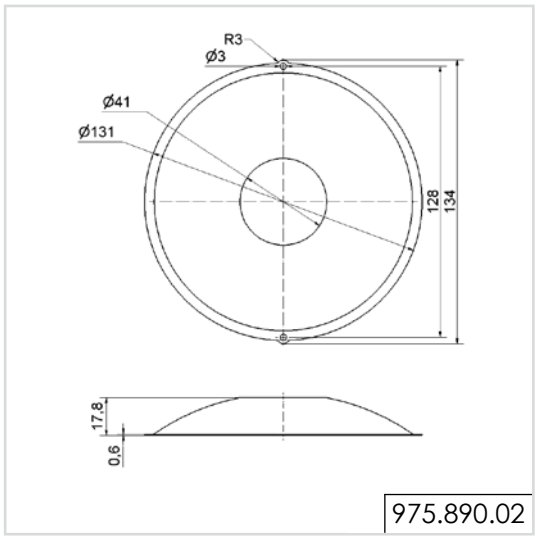

975.890.02

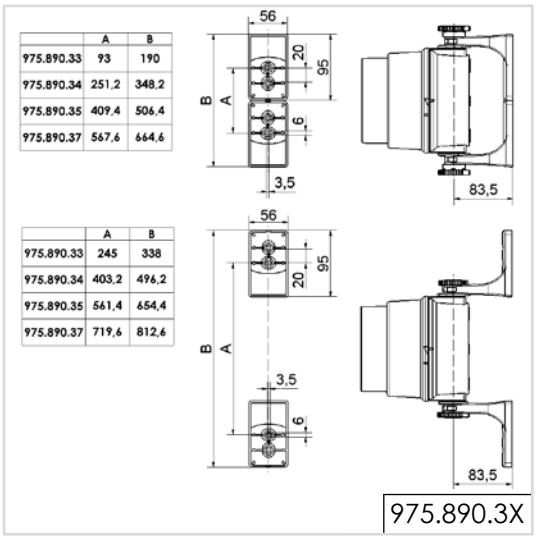

975.890.3X

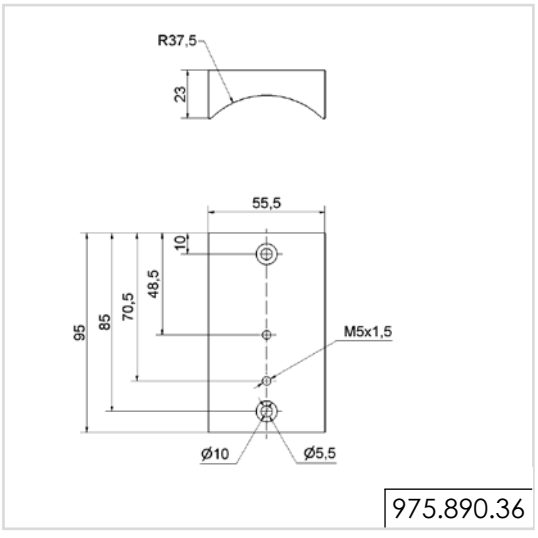

975.890.36

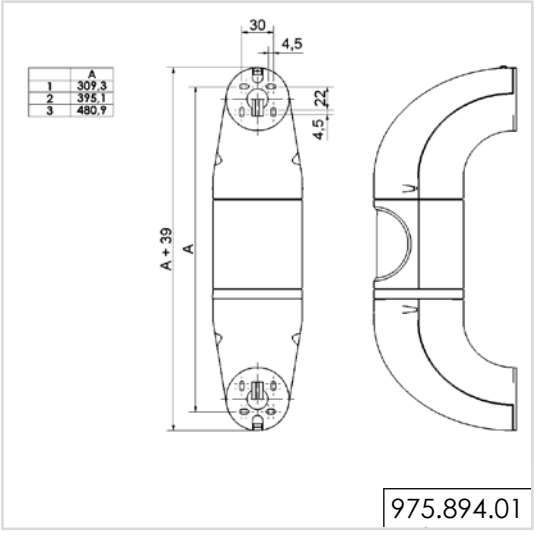

975.894.01

ADDITIONAL INFORMATION:

You are welcome to request the technical diagrams in digital form. The relevant 3D models, instruction leaflets and connection diagrams can be obtained from us or downloaded from our homepage at any time.

Technical Diagrams

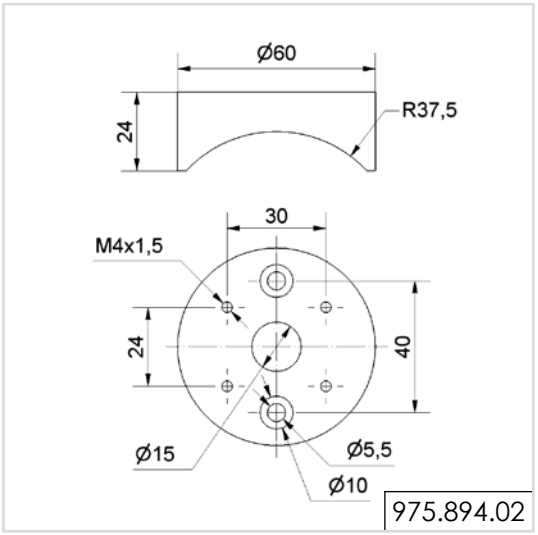

ADDITIONAL INFORMATION:

You are welcome to request the technical diagrams in digital form. The relevant 3D models, instruction leaflets and connection diagrams can be obtained from us or downloaded from our homepage at any time.