E11820

Fixing strap for clean-line cylinders

FIXING STRAP CLEAN-LINE CYL

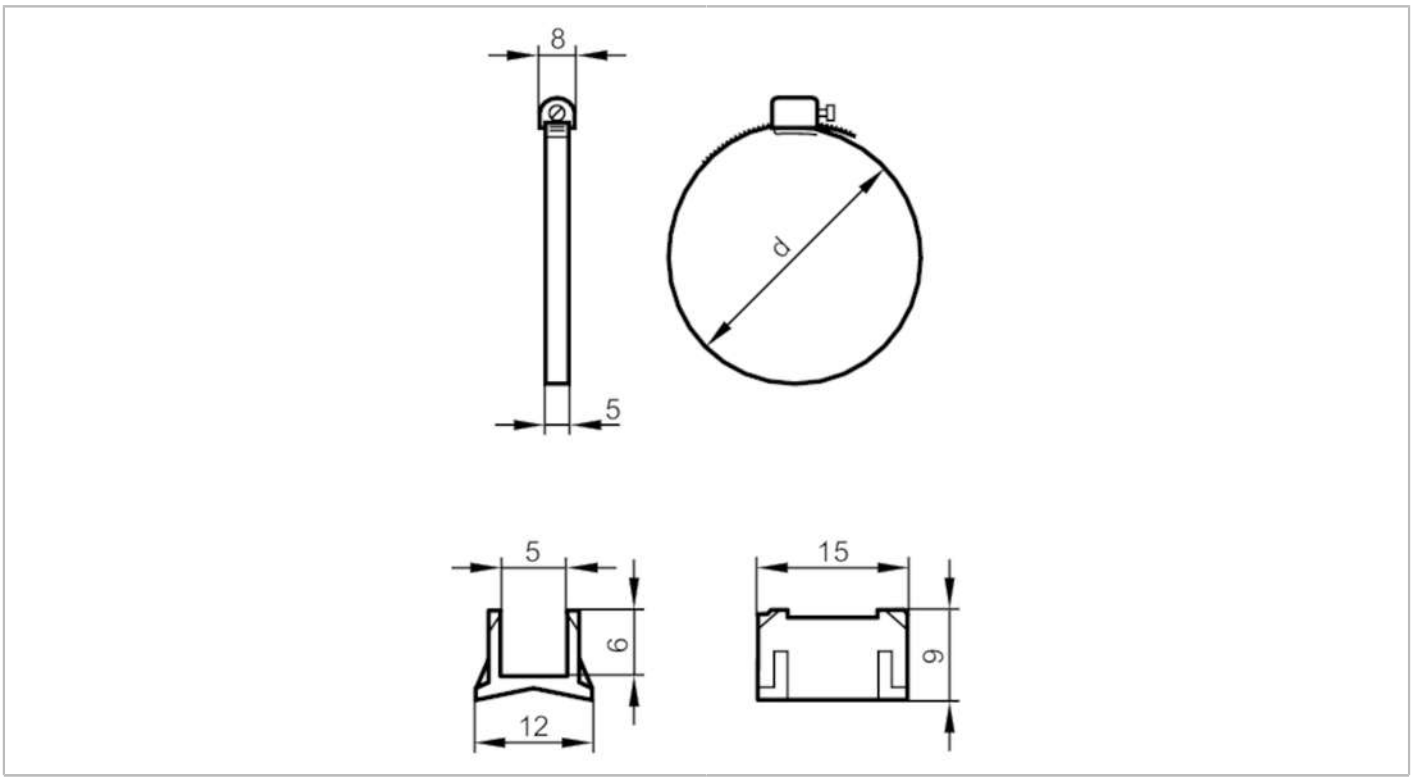

Application		
Design		for types MKT
Mechanical data		
Weight	[g]	7.7
Dimensions	[mm]	Ø 50
Materials		Adapter: PA; fixing strap: stainless steel (1.4305 / 303)
Piston diameter	[mm]	50
Clamping range	[mm]	48...59
Accessories		
Items supplied		Adapter: 1x, for types, MKT
		Fixing strap for clean-line cylinders: 1x
Remarks		
Pack quantity		1 pcs.