PTC HEATER

HG 140 | 15 - 150 W



- > Compact size
- > Wide voltage range
- > Heating power adjusts to ambient temperature
- > Cage clamp connectors for quick & easy wiring
- > DIN rail mountable

These heaters are used in enclosures where damage from condensation must be prevented, or where the temperature must be maintained above a minimum value. The aluminum profile heater body design has a chimney effect to distribute heat evenly. The cage clamp connectors save time and simplify installation.

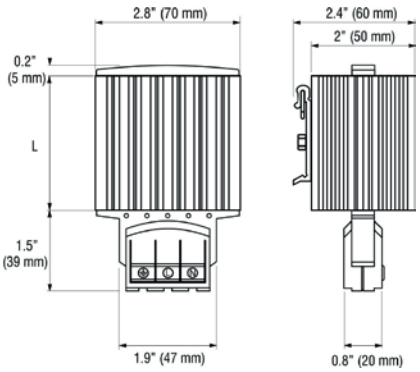

TECHNICAL DATA

Operating voltage[1]	AC/DC 120-240 V (min. 110 V, max. 265 V)
Heating element	PTC resistor - temperature limiting
Heater body	extruded aluminum profile, anodized
Connection	3 cage clamps for solid wire AWG 20-14 (0.5-2.5 mm²), and stranded wire (with wire end ferrule) - AWG 20-16 (0.5-1.5 mm²)
Connection casing	plastic, UL 94V-0, black
Mounting	clip for 35 mm DIN rail, EN 60715
Mounting position	vertical
Operating / Storage temperature	-49 to +158 °F (-45 to +70 °C)
Operating / Storage humidity	max. 90 %RH (non-condensing)
Protection class / Protection type	I (grounded) / IP20
Approvals	UL File No. E150057, VDE, GOST-R
Note	other voltages available upon request

[1] Operating high voltage heaters below AC/DC 140 V reduces heating performance by approx. 10%.

Part No.	Heating capacity[2]	Max. current (inrush)	Length (L on dim. dwg.)	Weight (approx.)
14000.0-00	15 W	1.5 A	2.56" (65 mm)	7.6 oz. (215 g)
14001.0-00	30 W	3.0 A	2.56" (65 mm)	7.6 oz. (215 g)
14003.0-00	45 W	3.5 A	2.56" (65 mm)	7.6 oz. (215 g)
14005.0-00	60 W	2.5 A	5.5" (140 mm)	14.1 oz. (400 g)
14006.0-00	75 W	4.0 A	5.5" (140 mm)	14.3 oz. (405 g)
14007.0-00	100 W	4.5 A	5.5" (140 mm)	14.3 oz. (405 g)
14008.0-00	150 W	9.0 A	8.66" (220 mm)	21.3 oz. (600 g)

[2] at 68 °F (20 °C) ambient temperature

www.stegousa.com

08.08.2014 | Specifications are subject to change without notice. Suitability of this product for its intended use and any associated risks must be determined by the end customer/buyer in its final application.