O5H503

Diffuse reflection sensor with background suppression

O5H-FPKG/2M

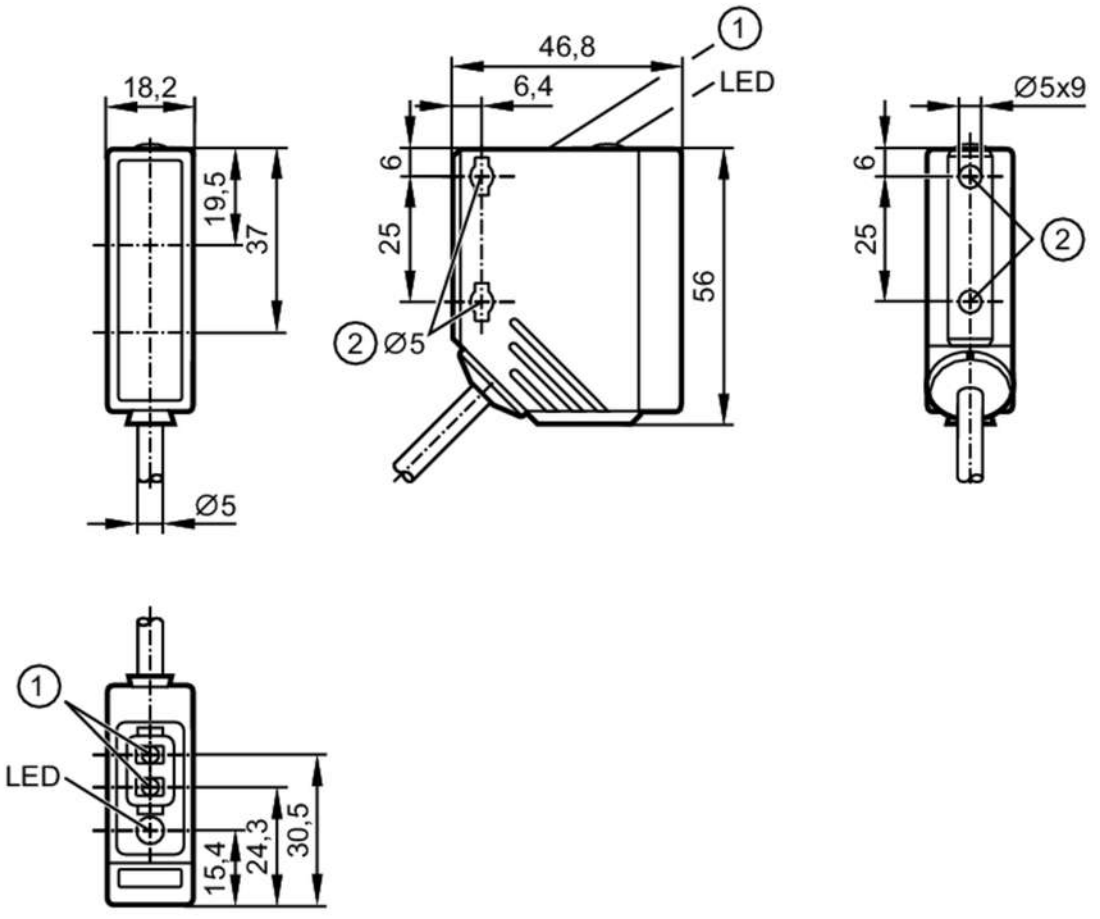

1 programming buttons
2 When a M5 mounting screw is used, the max. tightening torque is 2 Nm.
receiver in upper lens
transmitter in lower lens

Product characteristics		
Type of light		red light
Housing		rectangular
Application		
Special feature		Background suppression
Function principle		Diffuse reflection sensor
Electrical data		
Operating voltage	[V]	10...36 DC
Current consumption	[mA]	25
Protection class		II
Reverse polarity protection		yes
Type of light		red light
Wave length	[nm]	624
Outputs		
Electrical design		PNP

O5H503

Diffuse reflection sensor with background suppression

O5H-FPKG/2M

Output function		light-on/dark-on mode; (programmable)
Max. voltage drop switching output DC	[V]	2.5
Permanent current rating of switching output DC	[mA]	200
Switching frequency DC	[Hz]	1000
Short-circuit protection		yes
Type of short-circuit protection		pulsed
Overload protection		yes
Detection zone		
Range	[mm]	50...1800; (white paper 200 x 200 mm 90% remission)
Range on white object (90 % remission)	[mm]	50...1800
Range on grey object (18 % remission)	[mm]	50...900
Range on black object (6 % remission)	[mm]	50...600
Range adjustable		yes
Max. light spot diameter	[mm]	50
Light spot dimensions refer to		Range
Background suppression available		yes
Operating conditions		
Ambient temperature	[°C]	-25...60
Protection		IP 67
Tests / approvals		
EMC		EN 60947-5-2
MTTF	[years]	360
Mechanical data		
Weight	[g]	142
Housing		rectangular
Dimensions	[mm]	56 x 18.2 x 46.8
Materials		housing: PA; bezel: stainless steel; operator interface: TPU
Lens material		PMMA
Lens alignment		side lens
Displays / operating elements		
Display		switching status: 1 x LED, yellow
Teach function		yes
Electronic lock		yes
Remarks		
Remarks		operating voltage "supply class 2" according to cULus
Pack quantity		1 pcs.

O5H503

Diffuse reflection sensor with background suppression

O5H-FPKG/2M

Electrical connection

Cable: 2 m, PUR; 3 x 0.34 mm²

Connection

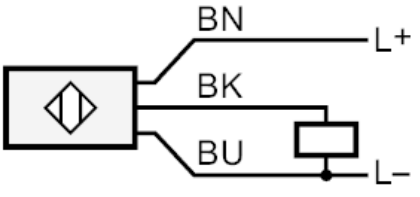

	Core colours :
BK =	black
BN =	brown
BU =	blue

Diagrams and graphs

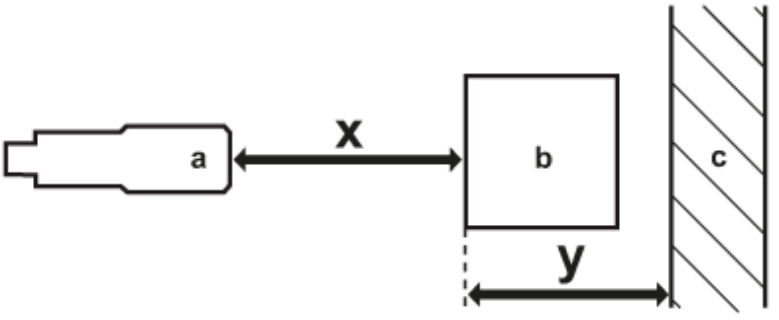

a: sensor

b: object

c: background

x: distance sensor/object [mm]

y: min. distance object/background [mm]

O5H503

Diffuse reflection sensor with background suppression

O5H-FPKG/2M

accuracy graph

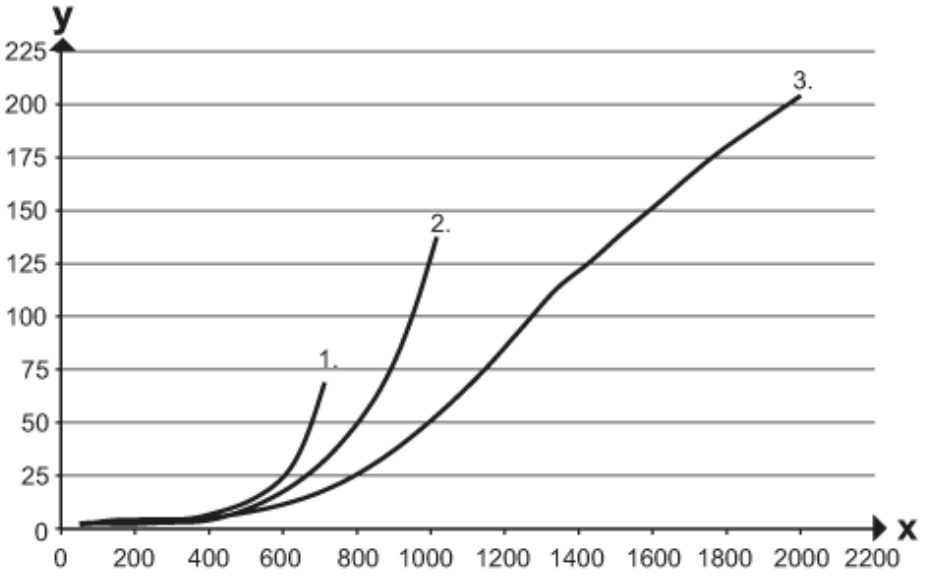

x: distance sensor/object [mm]

y: min. distance object/background [mm]

1 = object black (6 % remission) , background white (90 % remission)

2 = object grey (18 % remission) , background white (90 % remission)

3 = object white (90 % remission) , background white (90 % remission)