

Image may differ from product. See technical specification for details.

W 28

Lock washer for inch lock nuts

W lock washers are locking devices, used to secure AN and N lock nuts onto a shaft or adapter sleeve and prevent unintentional loosening. The lock washers engage a keyway in the shaft or adapter sleeve thread. They lock the nut in position when one of the washer

tabs is bent into one of the slots in the outside diameter of the lock nut. A new lock washer should be used each time the corresponding lock nut is installed.

- Simple, stable and reliable fastening element
- Easy to install and remove
- Used for normal series AN and N lock nuts

Overview

Dimensions

Bore diameter	141.783 mm

Properties

Locking device	Lock washer

Logistics

Product net weight	0.235 kg
eClass code	23-11-07-05
UNSPSC code	31163218

Technical specification

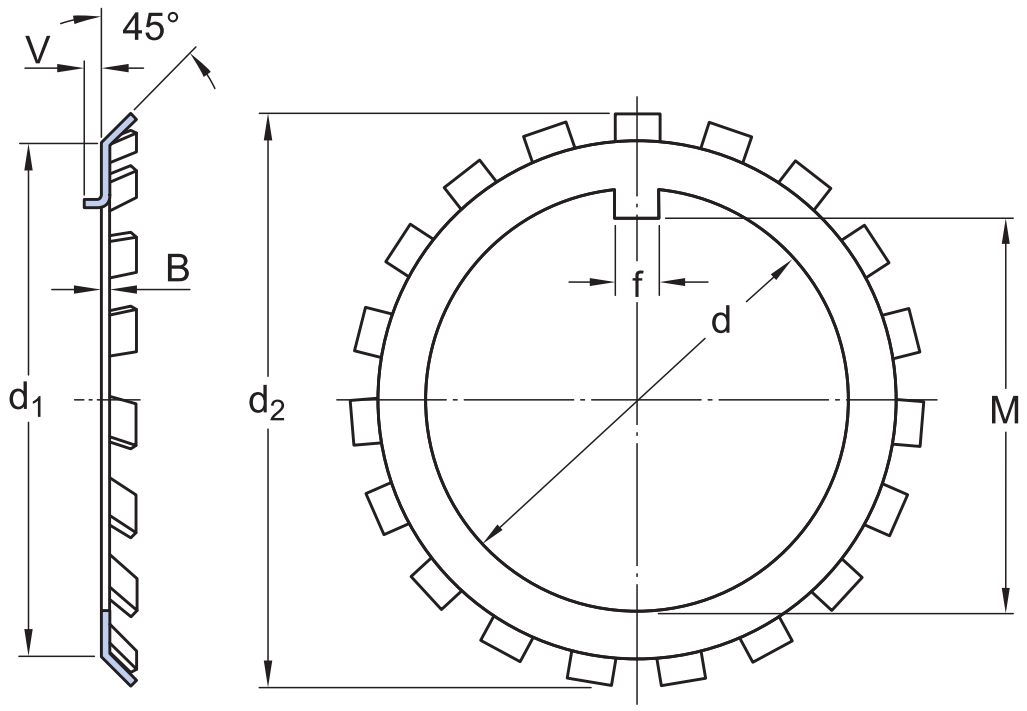

Dimensions

d	141.783 mm	Bore diameter
d_1	166.649 mm	Side face diameter
d_2	188.925 mm	Outside diameter over tabs
B	2.921 mm	Thickness material
f	14.986 mm	Width inner tab
M	136.144 mm	Inside dimension under inner tab
V	6.35 mm	Projection of key tang

More Information

Product details

- Designs and variants
- General product specifications
- Installation and removal
- Designation system

Tools

- Digital Tools

Terms of use

By accessing and using this website / app owned and published by AB SKF (publ.) (556007-3495 · Gothenburg) (“SKF”), you agree to the following terms and conditions:

Warranty Disclaimer and Limitation of Liability

Although every care has been taken to assure the accuracy of the information on this website / app, SKF provides this information "AS IS" and DISCLAIMS ALL WARRANTIES, EXPRESS OR IMPLIED, INCLUDING, BUT NOT LIMITED TO, IMPLIED WARRANTIES OF MERCHANTABILITY AND FITNESS FOR A PARTICULAR PURPOSE. You acknowledge that your use of this website / app is at your sole risk, that you assume full responsibility for all costs associated with use of this website / app, and that SKF shall not be liable for any direct, incidental, consequential, or indirect damages of any kind arising out of your access to, or use of the information or software made available on this website / app.

Any warranties and representations in this website / app for SKF products or services that you purchase or use will be subject to the agreed upon terms and conditions in the contract for such product or service.

Further, for non-SKF websites / apps that are referenced in our website / app or where a hyperlink appears, SKF makes no warranties concerning the accuracy or reliability of the information in these websites / apps and assumes no responsibility for material created or published by third parties contained therein. In addition, SKF does not warrant that this website / app or these other linked websites / apps are free from viruses or other harmful elements.

Third Party Services

When viewing YouTube content via the SKF website(s) (i.e. using YouTube API Services), you agree to be bound by the YouTube Terms of Service.

Copyright

Copyright in this website / app copyright of the information and software made available on this website / app rest with SKF or its licensors. All rights are reserved. All licensed material will reference the licensor that has granted SKF the right to use the material. The information and software made available on this website / app may not be reproduced, duplicated, copied, transferred, distributed, stored, modified, downloaded or otherwise exploited for any commercial use without the prior written approval of SKF. However, it may be reproduced, stored and downloaded for use by individuals without prior written approval of SKF. Under no circumstances may this information or software be supplied to third parties.

This website /app includes certain images used under license from Shutterstock, Inc.

Trademarks and Patents

All trademarks, brand names, and corporate logos displayed on the website / app are the property of SKF or its licensors, and may not be used in any way without prior written approval by SKF. All licensed trademarks published on this website / app reference the licensor that has granted SKF the right to use the trademark. Access to this website / app does not grant to the user any license under any patents owned by or licensed to SKF.

Changes

SKF reserves the right to make changes or additions to this website / app at any time.