WIRING DIAGRAM

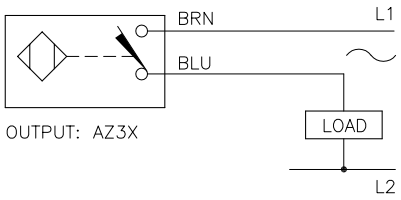

WARNING: NO SHORT-CIRCUIT PROTECTION
ALWAYS WIRE A LOAD IN SERIES WITH THE SENSOR.

LOCKNUT LN-P30

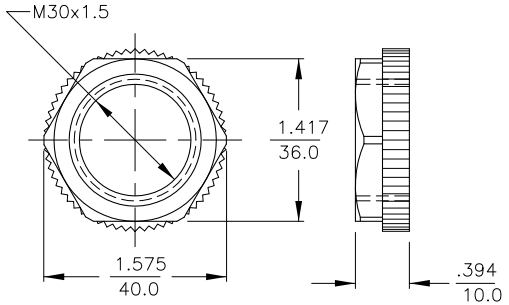

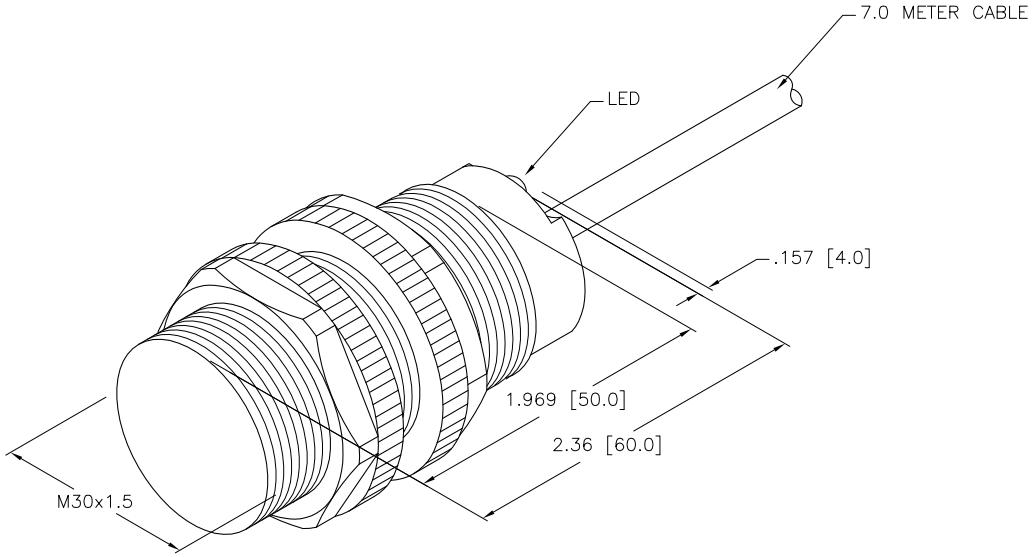

SPECIFICATIONS

RATED OPERATING DISTANCE	15mm = .591"
MOUNTING MODE	FLUSH
TEMPERATURE DRIFT	≤±10% ≤±20%, ≥ +70°C
HYSTERESIS	3-15%
MIN. REPEAT ACCURACY	≤2%
OPERATING TEMPERATURE	-25°C to +100°C (-13°F to +212°F)
RATED OPERATIONAL VOLTAGE (AC/DC)	20-250 VAC/10-300 VDC
RATED OPERATIONAL CURRENT (AC)	≤400 mA
RATED OPERATIONAL CURRENT (DC)	≤300 mA
MAINS FREQUENCY	50-60 Hz
RESIDUAL CURRENT	≤1.7 mA
RATED INSULATION VOLTAGE	≤1.5 kV
SURGE CURRENT	≤8.0 A (≤10 ms MAX. 5 Hz)
MAX. VOLTAGE DROP	≤6.0 V
OUTPUT FUNCTION	2-WIRE, NORMALLY OPEN
SMALLEST OPERATING CURRENT	≥3 mA
MAX. SWITCHING FREQUENCY	≤0.02 kHz
HOUSING MATERIAL	PLASTIC, PA12-GF20
ACTIVE FACE MATERIAL	PLASTIC, PA12-GF20
END CAP MATERIAL	PLASTIC, EPTR
CABLE	ø5.2, PVC
VIBRATION RESISTANCE	55 Hz (IN ALL 3 PLANES)
SHOCK RESISTANCE	30 g, 11 ms
DEGREE OF PROTECTION	IP 67
SWITCHING STATUS INDICATION	LED, YELLOW

SOURCE DRAWING - FOR REFERENCE ONLY

REV	DESCRIPTION	BY	DATE	ECO NO.
A	DRAWING RELEASE	RDS	01/17/12	

RELATED DOCUMENTS
1.
2.
3.
4.

3RD ANGLE PROJECTION

THIS DRAWING IS CONFIDENTIAL AND THE PROPERTY OF TURCK INC. USE OF THIS DOCUMENT WITHOUT WRITTEN PERMISSION IS PROHIBITED.

TURCK INC
High Technology Sensors and Automation Controls
3000 CAMPUS DRIVE
MINNEAPOLIS, MN 55441
1-800-544-7769
(763) 553-7300
(763) 553-0708 fax
turck.com

MATERIAL
SEE SPECIFICATIONS

FINISH

ALL DIMENSIONS DISPLAYED ON THIS DRAWING ARE FOR REFERENCE ONLY

CONTACT TURCK FOR MORE INFORMATION

DRFT RDS | DATE 01/16/12
APVD J.M. | SCALE 1=1.3

UNIT OF MEASUREMENT
INCH [MILLIMETER]
DO NOT SCALE THIS DRAWING

DESCRIPTION
NI15-S30-AZ3X 7M

IDENTIFICATION NO. T4355597 | REV A

FILE: T4355597 | SHEET 1 OF 1

Approved 01/17/2012, work order #23693 by J.M.