DN4218

Switched-mode power supply 24 V DC

PSU-1AC/24VDC-12A/IOL/IP67

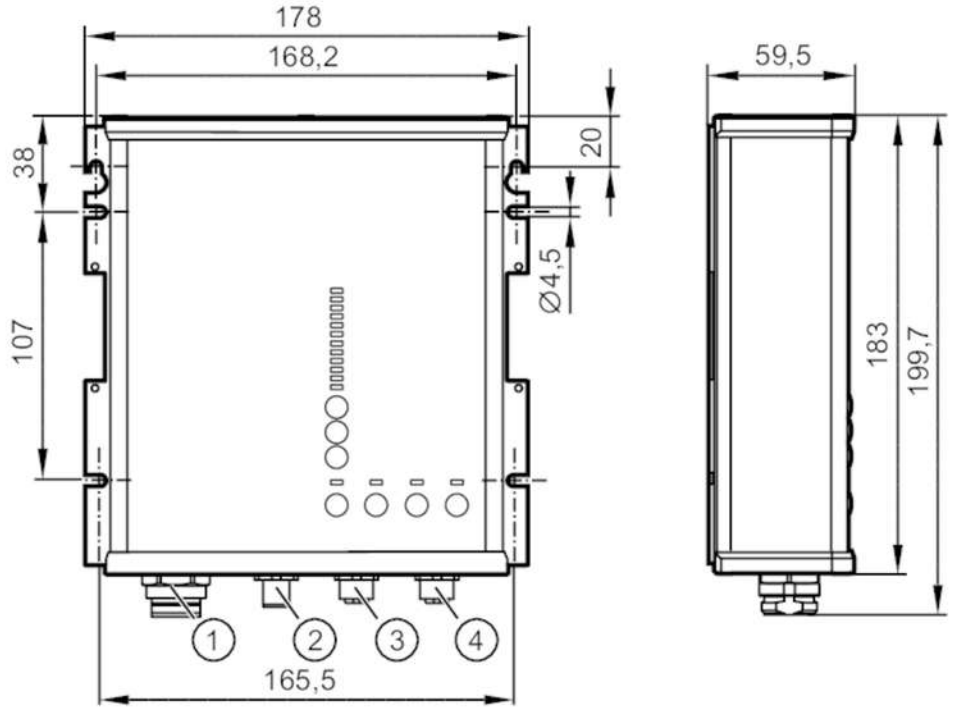

1 power supply
2 IO-Link
3 Output voltage
4 Output voltage

Electrical data		
Nominal voltage AC	[V]	230
Nominal voltage DC	[V]	300
Nominal frequency AC	[Hz]	50...60
Input voltage DC	[V]	110...300
Input voltage range AC	[V]	100...240
Output voltage DC	[V]	24...28
Protection class		I
Max. power-on delay time	[ms]	1.3
Max. output current at min. output voltage	[A]	12.5
Max. output current at max. output voltage	[A]	10.7
Output power (permanent)	[W]	300
Output power (peak)	[W]	600
Power factor (nominal voltage 230 V AC / 50 Hz)		0.97
Number of output circuits		4
Efficiency (nominal voltage 120 V AC / 60 Hz)	[%]	94.3
Efficiency (nominal voltage 230 V AC / 50 Hz)	[%]	95.7

DN4218

Switched-mode power supply 24 V DC

PSU-1AC/24VDC-12A/IOL/IP67

Mains buffering time (nominal voltage 120 V AC / 60 Hz)	[ms]	44
Mains buffering time (nominal voltage 230 V AC / 50 Hz)	[ms]	44
Input current (nominal voltage 120 V AC / 60 Hz)	[A]	3.2
Input current (nominal voltage 230 V AC / 50 Hz)	[A]	1.68

Interfaces

Communication interface		IO-Link
Transmission type		COM3 (230,4 kBaud)
IO-Link revision		1.1
SIO mode		yes
Min. process cycle time	[ms]	2.2

Operating conditions

Ambient temperature	[°C]	-25...55
Note on ambient temperature		the derating of the current load indicated in the operating instructions is to be taken into account at the following ambient temperature: 70 °C
Storage temperature	[°C]	-40...85
Max. relative air humidity	[%]	95; (relative humidity)
Max. height above sea level	[m]	5000
Protection		IP 65; IP 67
Pollution degree		3

Tests / approvals

EMC	EN 61000-4-2 CD	8 kV / failure criterion A
	EN 61000-4-2 AD	15 kV / failure criterion A
	EN 61000-4-3	80 Mhz...2.7 GHz / 20 V/m failure criterion A
	EN 61000-4-3	2.7 GHz...6 GHz kV / 10 V/m failure criterion A
	EN 61000-4-8	50 / 60 Hz / 30 A/m failure criterion A
	EN 61000-4-4 Burst	4 kV / failure criterion A
	EN 61000-4-5 Surge	2 kV Lx / Ly / failure criterion A
	EN 61000-4-5 Surge	4 kV L / PE / failure criterion A
	EN 61000-4-5 Surge	1 kV + / - / failure criterion A
	EN 61000-4-5 Surge	1 kV + - / PE / failure criterion A
	EN 61000-4-5 Surge	1 kV + - / PE / failure criterion A
	EN 61000-4-5 Surge	1 kV DC-OK / PE / failure criterion A
	EN 61000-4-6	0.15...80 MHz / 20 V failure criterion A
	EN 61000-4-11	0 V up to 1 cycle / failure criterion A
	EN 61000-4-11	40 % of V / 200 ms failure criterion A
	EN 61000-4-11	70 % of V / 500 ms failure criterion A
	EN 61000-4-11	0 V / 5000 ms failure criterion C
	VDE 0160	1550 V / 1.3 ms failure criterion A
	EN 55032	Class B
	EN 55032	Class B
	EN 55011	Class B
	EN 61000-3-2	
	EN 61000-3-3	

DN4218

Switched-mode power supply 24 V DC

PSU-1AC/24VDC-12A/IOL/IP67

Continuous shock resistance		IEC 60068-2-27	30 g 6 ms / 20 g 11 ms
Vibration resistance		IEC 600068-2-6	2...17.8 Hz ± 1.6mm / 17.8...500 Hz 2 g
Mechanical data			
Weight	[g]	1524.5	
Dimensions	[mm]	182 x 183 x 59	
Materials		housing: aluminium alloy; housing cap: PC; screws: steel bronzed	
Remarks			
Pack quantity		1 pcs.	

Electrical connection - IO-Link

Connector: 1 x M12; coding: A; Locking: brass

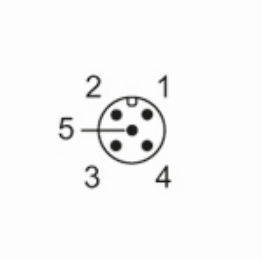

1: L+	(US)
2: n.c.	
3: L-	(US)
4: IO-Link	
5: n.c.	

Electrical connection - Output voltage

Connector: 2 x M12; coding: A; Locking: brass

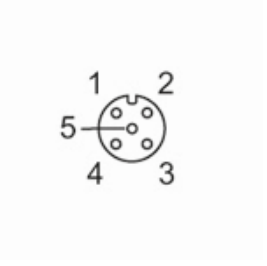

1: L+	(UA2)
2: L-	(UA1)
3: L-	(UA2)
4: L+	(UA1)
5: FE	

DN4218

Switched-mode power supply 24 V DC

PSU-1AC/24VDC-12A/IOL/IP67

Electrical connection - power supply

Connector: 1 x 7/8"; Locking: brass

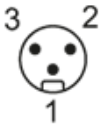

1: PE
2: L
3: N

Diagrams and graphs

block diagram

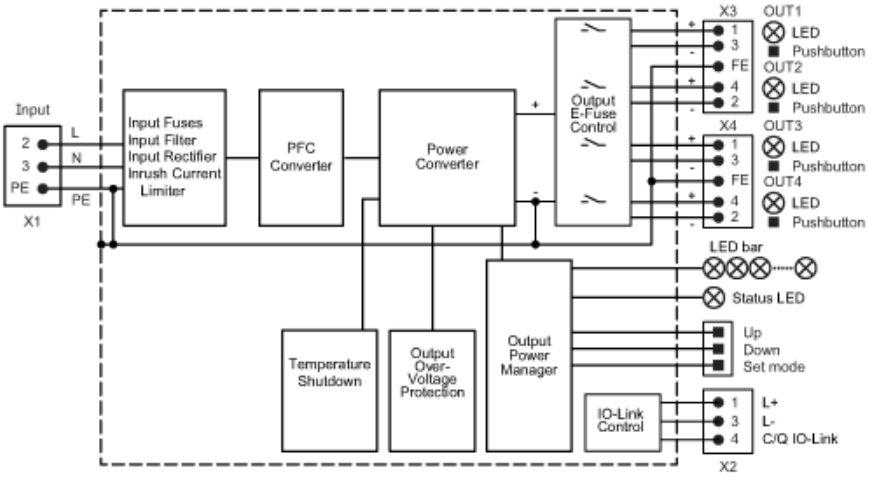

output characteristics

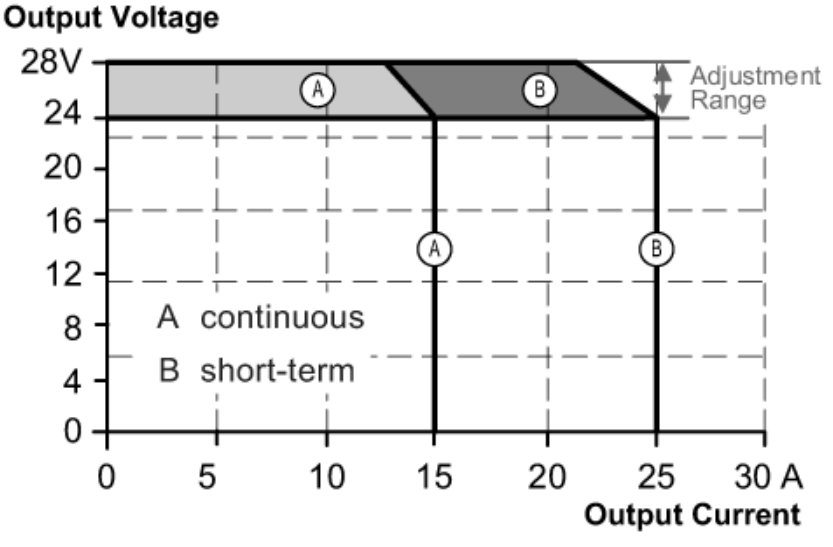

DN4218

Switched-mode power supply 24 V DC

PSU-1AC/24VDC-12A/IOL/IP67

characteristic curve for degree of efficiency / power loss

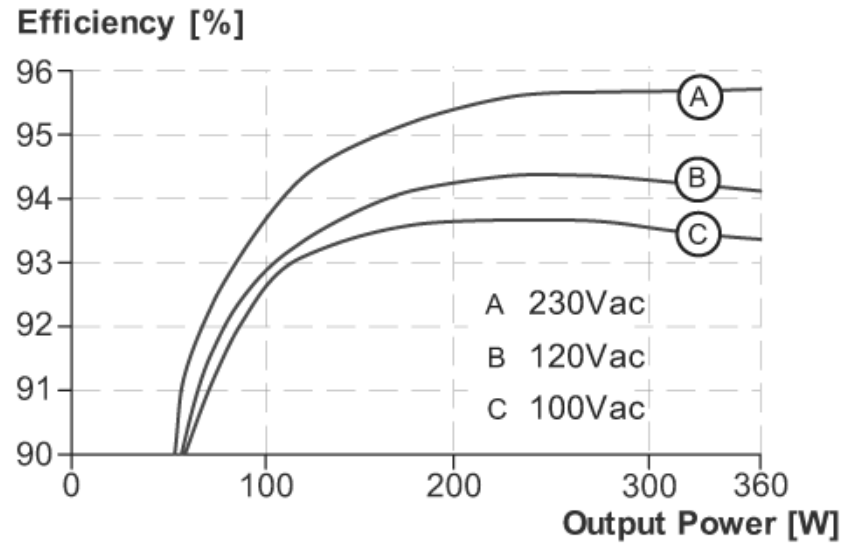

characteristic line for derating

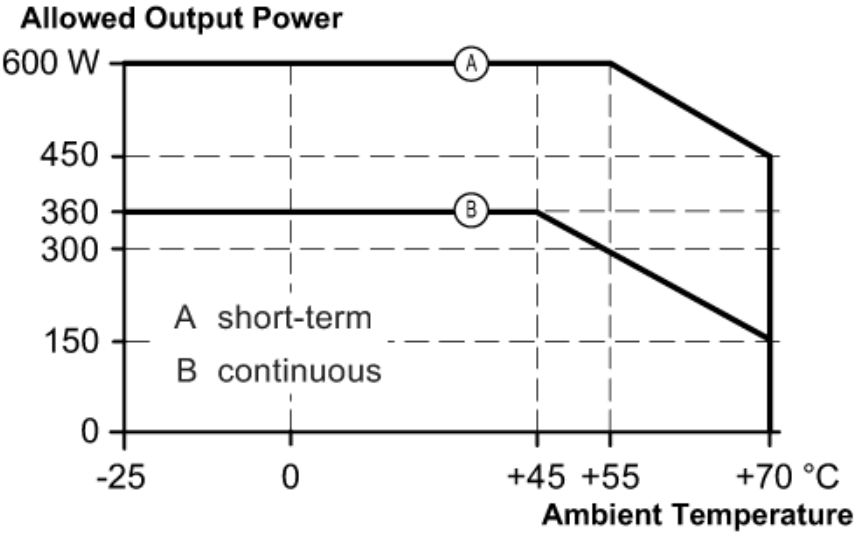

characteristic line for mains buffering time

