E30513

Gasket

SEAL RING FFKM G1/2

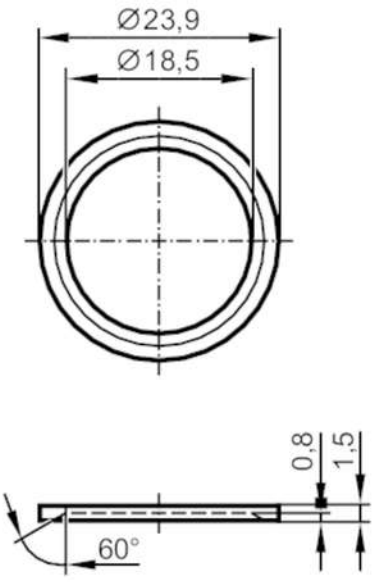

Application		
Design		for units with process connection G ½
Operating conditions		
Ambient temperature	[°C]	-5...200
Tests / approvals		
Standard		DIN EN ISO 1179-2
Mechanical data		
Weight	[g]	2.05
Inside diameter	[mm]	18.5
External diameter	[mm]	23.9
Materials		FFKM
Remarks		
Pack quantity		1 pcs.