lumbergautomation
A BELDEN BRAND

Product: GK2H6X/Z B



SPE M12 SPE front wall mounting screw, in plastic bag package

Product Description

SPE M12 SPE front wall mounting screw, in plastic bag package

Technical Drawing

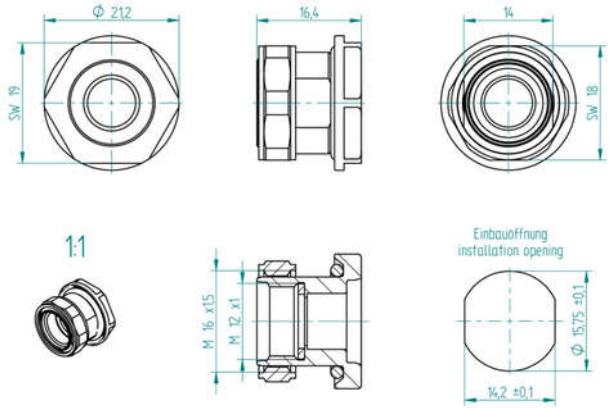

Technical Specifications

Technical Data

Product Family:	SPE Receptacles
Product Sub Family:	SPE Receptacle M12 Accessories
Mating Side:	Screw-Locking / Push-Pull
Brand:	Lumberg Automation
Connector Design:	Straight
Type of Connection:	Screw-Locking / Push-Pull
Thread Size:	M12 x 1
Thread Plating:	Nickel-plated

Additional Technical Data

Fastening Torque (Attachment):	M 12x1: 60 Ncm, hand-tight

Safety & Environmental Compliance

RoHS Compliant:	Yes
China RoHS-Compliant:	Yes

Notes

Protection Degree / IP Rating Note:	** only if mounted and locked in combination with Hirschmann / Lumberg Automation connector.

© 2024 Belden, Inc

All Rights Reserved.

Although Belden makes every reasonable effort to ensure their accuracy at the time of this publication, information and specifications described here in are subject to error or omission and to change without notice, and the listing of such information and specifications does not ensure product availability.

Belden provides the information and specifications herein on an "ASIS" basis, with no representations or warranties, whether express, statutory or implied. In no event will Belden be liable for any damages (including consequential, indirect, incidental, special, punitive, or exemplary damages) whatsoever, even if Belden has been advised of the possibility of such damages, whether in an action under contract, negligence or any other theory, arising out of or in connection with the use, or inability to use, the information or specifications described herein.

All sales of Belden products are subject to Belden's standard terms and conditions of sale.

Belden believes this product to be in compliance with all applicable environmental programs as listed in the data sheet. The information provided is correct to the best of Belden's knowledge, information and belief at the date of its publication. This information is designed only as a general guide for the safe handling, storage, and any other operation of the product itself or the one that it becomes a part of. The Product Disclosure is not to be considered a warranty or quality specification. Regulatory information is for guidance purposes only. Product users are responsible for determining the applicability of legislation and regulations based on their individual usage of the product.