Product datasheet
Characteristics

XMLB160D2S11
pressure switch XMLB 160 bar - adjustable scale 2 thresholds - 1 C/O

Price* : 182.30 GBP



Main

Range of product	OsiSense XM
Product or component type	Electromechanical pressure sensor
Pressure sensor type	Electromechanical pressure sensor
Device short name	XMLB
Pressure sensor size	160 bar
Controlled fluid	Hydraulic oil (0...160 °C)
Fluid connection type	G 1/4 (female) conforming to ISO 228
Electrical connection	Screw-clamps terminals 1 x 0.5...2 x 2.5 mm² 1 connector Pg 13
AWG gauge	AWG 20...AWG 14
Cable entry	Cable gland 9...13 mm
Contacts type and composition	1 C/O
Product specific application	-
Pressure switch type of operation	Regulation between 2 thresholds
Electrical circuit type	Control circuit
Scale type	Adjustable differential
Local display	With
Adjustable range of switching point on rising pressure	10...160 bar
Adjustable range of switching point on falling pressure	0.7...139.2 bar
Possible differential maximum at high setting	100 bar
Maximum permissible accidental pressure	360 bar
Destruction pressure	720 bar
Pressure actuator	Piston
Materials in contact with fluid	Brass FPM, FKM PTFE Steel
Enclosure material	Zinc alloy
[In] rated current	3 A, B300, AC-15 (Ue = 120 V) conforming to EN/IEC 60947-5-1 1.5 A, B300, AC-15 (Ue = 240 V) conforming to EN/IEC 60947-5-1

Disclaimer: This documentation is not intended as a substitute for and is not to be used for determining suitability or reliability of these products for specific user applications

	0.1 A, R300, DC-13 (Ue = 250 V) conforming to EN/IEC 60947-5-1

Complementary

Possible differential minimum at low setting	9.3 bar (- 1.8 bar, + 1.5 bar)
Possible differential minimum at high setting	20.8 bar (- 1.9 bar, + 1.6 bar)
Maximum permissible pressure - per cycle	200 bar
Terminal block type	4 terminals
Operating rate	60 cyc/mn
Repeat accuracy	< 2 %
[Ui] rated insulation voltage	300 V conforming to CSA C22.2 No 14 500 V conforming to EN/IEC 60947-1 300 V conforming to UL 508
[Uimp] rated impulse withstand voltage	6 kV conforming to EN/IEC 60947-1
Auxiliary contacts operation	Snap action
Contacts material	Silver contacts
Resistance across terminals	< 25 mOhm conforming to IEC 255-7 category 3 < 25 mOhm conforming to NF C 93-050 method A
Short-circuit protection	10 A cartridge fuse type gG (gl)
Mechanical durability	6000000 cycles
Setting	External
Height	113 mm
Depth	75 mm
Width	35 mm
Product weight	0.75 kg

Environment

Standards	CE EN/IEC 60947-5-1 UL 508 CSA C22.2 No 14
Product certifications	BV CCC CSA LROS (Lloyds register of shipping) UL EAC
Protective treatment	TC (standard version)
Ambient air temperature for operation	-25...70 °C
Ambient air temperature for storage	-40...70 °C
Operating position	Any position
Vibration resistance	4 gn (f = 30...500 Hz) conforming to IEC 60068-2-6
Shock resistance	50 gn conforming to IEC 60068-2-27
Electrical shock protection class	Class I conforming to IEC 1140 Class I conforming to IEC 536 Class I conforming to NF C 20-030
IP degree of protection	IP66 conforming to EN/IEC 60529

Offer Sustainability

RoHS (date code: YYWW)	Compliant - since 0902 - Schneider Electric declaration of conformity Schneider Electric declaration of conformity
REACh	Reference not containing SVHC above the threshold Reference not containing SVHC above the threshold
Product end of life instructions	Need no specific recycling operations

Contractual warranty

Warranty period	18 months

XMLB160D2S11

Dimensions

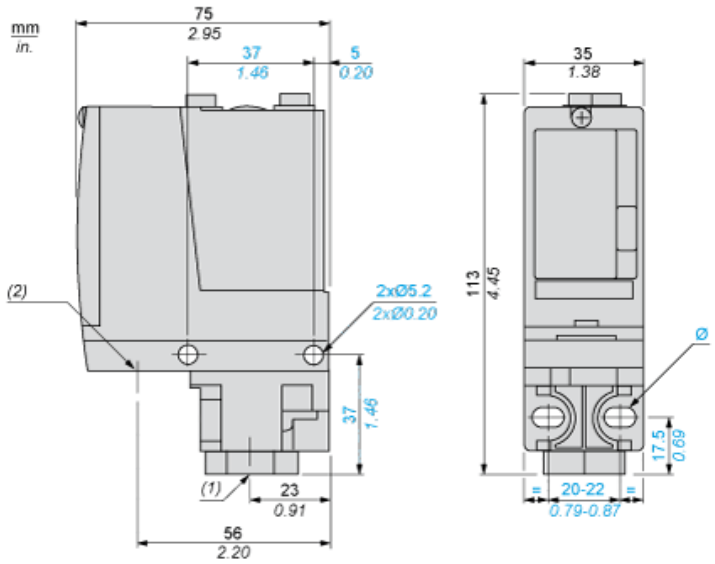

(1) 1 fluid entry, tapped G1/4 (BSP female)
(2) 1 electrical connections entry, tapped Pg 13.5
Ø : 2 elongated holes Ø 5.2 x 6.7

Wiring Diagram

Terminal Model

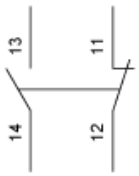

XMLB160D2S11

Operating Curves

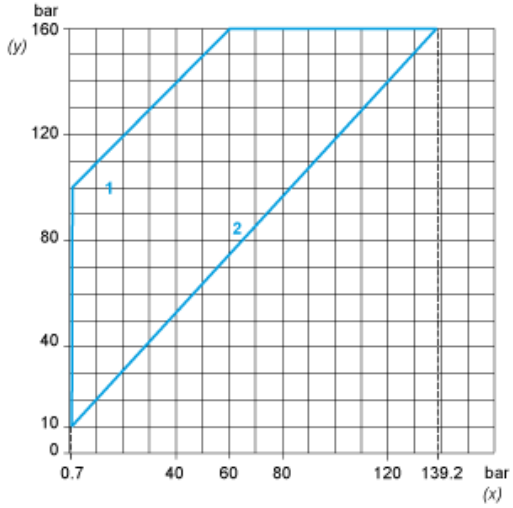

(y) Rising pressure
(x) Falling pressure
1 : Maximum differential
2 : Minimum differential

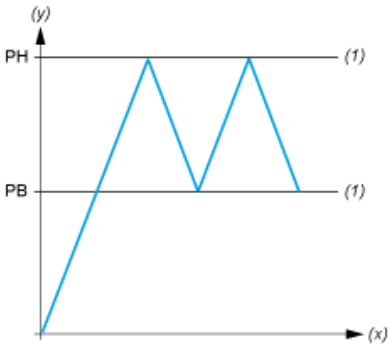

(y) Pressure
(x) Time
(1) Adjustable value
PH : High point
PB : Below point