Capacitive Sensors

BAE SA-CS-025-YP-BP02
Order Code: BAE00KH

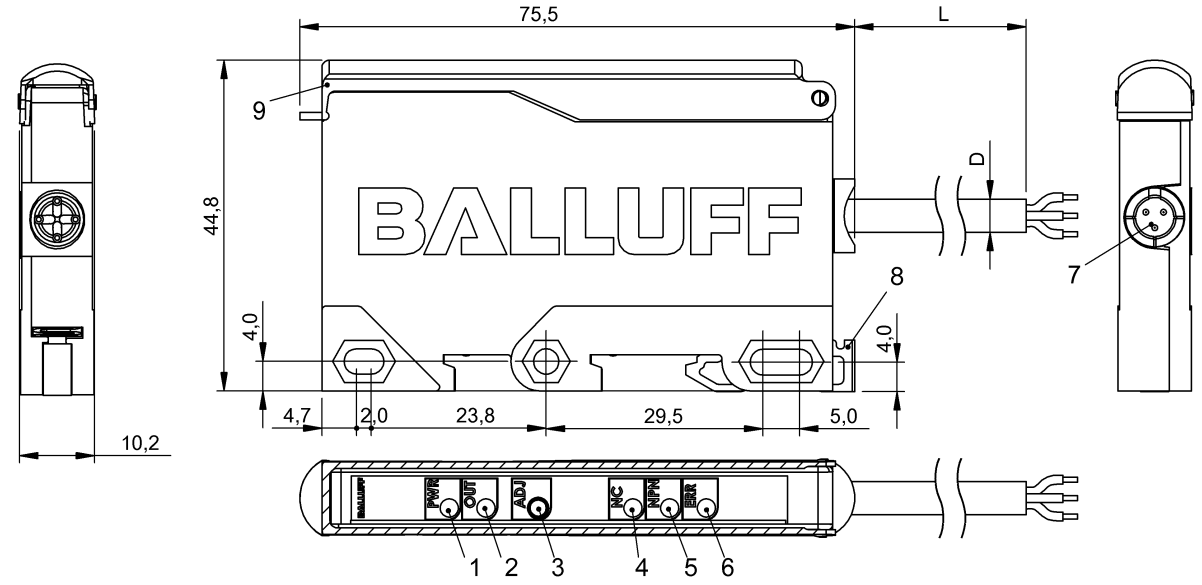

1) LED Power, 2) LED function indicator, 3) Sn, 4) LED N.C. function active, 5) Switching stage NPN, active, 6) LED Error, 7) Plug connection sensor, 8) DIN rail mount 35mm, 9) Flap

IND. CONT. EQ 81U2 for use in the secondary of a class 2 source of supply

Display/Operation

Adjuster	Trimmer potentiometer
Function indicator	yes
Power indicator	yes
Setting	Sensitivity (Sn)

Electrical connection

Cable diameter D	4.50 mm
Cable length L	2 m
Conductor cross-section	0.25 mm²
Number of conductors	4
Polarity reversal protected	yes
Protection against device mix-ups	yes
Short-circuit protection	yes

Electrical data

No-load current Io max. at Ue	25 mA
Operating voltage Ub	12...30 VDC
Rated operating current Ie	50 mA
Rated operating voltage Ue DC	24 V
Switching frequency	100 Hz
Voltage drop Ud max. at Ie	2 V

Environmental conditions

Ambient temperature	-10...70 °C
IP rating	IP40
Storage temperature	-25...85 °C

Functional safety

MTTF (40 °C)	405 a

General data

Approval/Conformity	CE cULus WEEE
Basic standard	IEC 60947-5-2
Series	BAE

Material

Cover cap material	PA
Cover material	PBT
Housing material	PBT
Material jacket	PUR

Mechanical data

Dimension	10.5 x 45 x 75.5 mm
Mounting	Screw M3 DIN EN-50022 rail 35 mm DIN EN-50045 rail 15 mm

Output/Interface

Switching output	PNP/NPN NO/NC programmable

BAE SA-CS-025-YP-BP02
Order Code: BAE00KH

Remarks

Please observe EMC-conformal cable routing. All measuring and norm vales in the data sheet are referenced to 2 m single-ended cordset.
max. load current: 50mA with UL approval, <50 to 100mA possible, but without UL approval
For further information about the MTTF and B10d see MTTF / B10d certificate

Indication of the MTTF- / B10d value does not represent a binding composition and/or life expectancy assurance; these are simply experiential values with no warranty implications. These declared values also do not extend the expiration period for defect claims or affect it in any way.

Wiring Diagrams

