Brand of NTN corporation

Technical data

32213A

Single row tapered roller bearings



Tapered roller bearing, pressed steel cage

VISUAL (S)

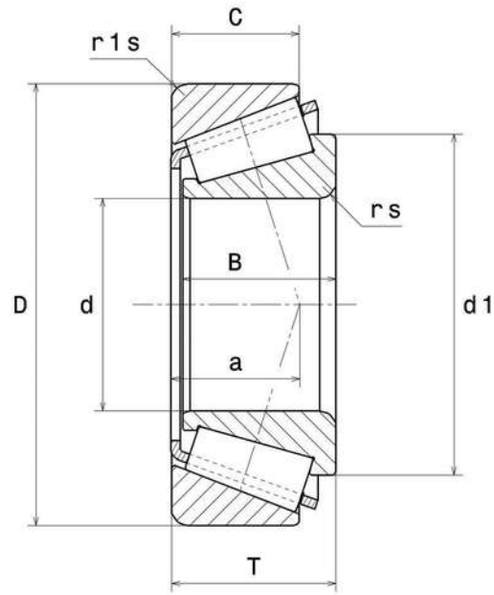

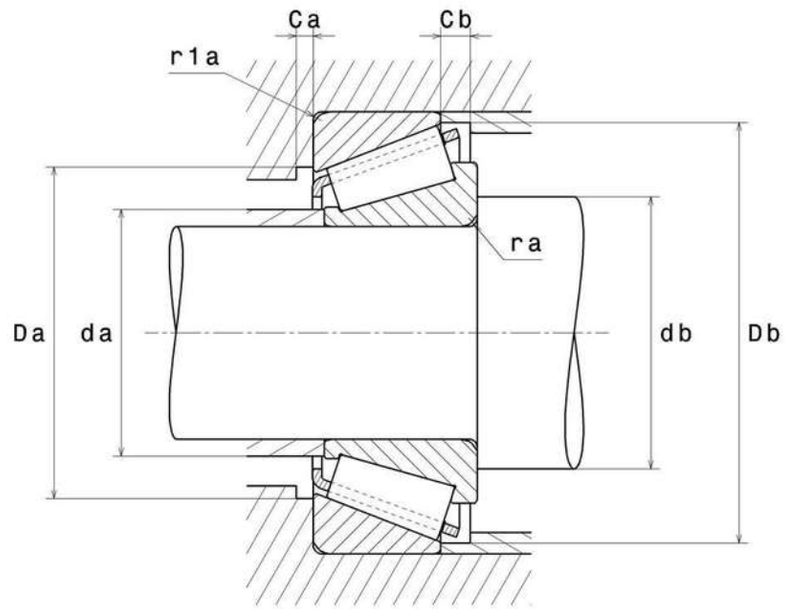

NTN Europe
1 rue des Usines · BP 2017 · 74010 Annecy Cedex · France · Tel. +33 (0)4 50 65 30 00
S.A. au capital de 322 639 919 € · RCS ANNECY B 325 821 072 · Id. Fiscale : FR 48 325 821 072
SIRET 325 821 072 00015 · Code APE 2815 Z · Code NACE 28.15

32213A
Single row tapered roller bearings

PRODUCT DEFINITION	
Brand	SNR
d - Internal diameter	65 mm
D - External diameter	120 mm
B - Bearing/Inner ring width	31 mm
C - Outer ring width	27 mm
T - Total width	32,75 mm
d1 - External diameter inner ring	91,1 mm
a - Charge load application point	27,4 mm
rs - Min fillet radius	2 mm
r1s - Min fillet radius	1,5 mm
Mass	1,564 kg
ISO 355 reference	T3EC065

PRODUCT PERFORMANCE	
C - Dynamic load	176 kN
A2 - Rating life coefficient	1
C0 - Static load	222 kN
Cu - Fatigue limit load	27,1 kN
e - Coefficient	0.4
Y0 - Static axial load coefficient	0.81
Y2 - Upper axial load coefficient	1.48
N ref - Reference thermal speed	3500 tr/min
N lim - Mechanical Limit Speed	5900 tr/min
Tmin - Min operating temperature	-40 °C

PRODUCT PERFORMANCE	
Tmax - Max operating temperature	120 °C

BEARING FREQUENCIES	
BPFO - Over rolling frequency on outer ring (60 rpm)	8.09 Hz
BPFI - Over rolling frequency on inner (60 rpm)	10.91 Hz
BSF - Over rolling frequency on rolling element (60 rpm)	6.345 Hz
BRF - Fréquence de rotation : Élément roulant	3.173 Hz
FTF - Rotational frequency - cage (60 rpm)	0.426 Hz

ABUTMENT	
da max - Max shoulder diameter IR	75 mm
db min - Min IR shoulder diameter	75 mm
Da min - Min shoulder diameter OR	104 mm
Da max - Max shoulder diameter OR	111,5 mm
Db min - Min OR shoulder diameter	115 mm
Ca - Min clearance	4 mm
Cb - Min clearance	5,5 mm
ra max - Max fillet radius	2 mm
r1a - Max fillet radius	1,5 mm

ESHOPDONOTDISPLAY	
Reference	32213A
Image	TRB_1.jpg, TRB_2.jpg, TRB_3.jpg
KIZEI	Non/No
TOPLINE	Non/No
ULTAGE	Non/No

ESHOPDONOTDISPLAY	
Tracepart	Oui/Yes
- Contact angle	15.109 °

INDUSTRY CALCUL FACTORS

Equivalent dynamic radial load

$P = X.Fr + Y.Fa$

Fa / Fr ≤ e		Fa / Fr > e	
X	Y	X	Y
1	0	0.4	Y2

Equivalent static radial load

$Po = Xo.Fr + Yo.Fa$

X_0	Y_0
0.5	Y0

If Po <Fr, then use Po = Fr

The values for e, Y2 and Y0 are shown in the above table