# Product data sheet
## Characteristics

# XUSZLPE
## laser alignment tool for safety light curtains type2, type4



### Main

| | |
|---|---|
| Range of product | Preventa Safety detection |
| Accessory / separate part designation | Laser alignment tool |
| Accessory / separate part type | Laser |
| Accessory / separate part category | Installation accessories |
| Accessory / separate part destination | Safety light curtain type 2<br>Safety light curtain type 4 |

### Complementary

| | |
|---|---|
| Product weight | 0.8 kg |

### Offer Sustainability

| | |
|---|---|
| Sustainable offer status | Green Premium product |
| RoHS (date code: YYWW) | Compliant - since 1425 - Schneider Electric declaration of conformity |
| REACh | Reference not containing SVHC above the threshold |
| Product environmental profile | Available Download Product Environmental |
| Product end of life instructions | Available Download End Of Life Manual |

The information provided in this documentation contains general descriptions and/or technical characteristics of the performance of the products contained herein.
This documentation is not intended as a substitute for and is not to be used for determining suitability or reliability of these products for specific user applications.
It is the duty of any such user or integrator to perform the appropriate and complete risk analysis, evaluation and testing of the products with respect to the relevant specific application or use thereof.
Neither Schneider Electric Industries SAS nor any of its affiliates or subsidiaries shall be responsible or liable for misuse of the information contained herein.

# XUSZLPE

## Dimensions

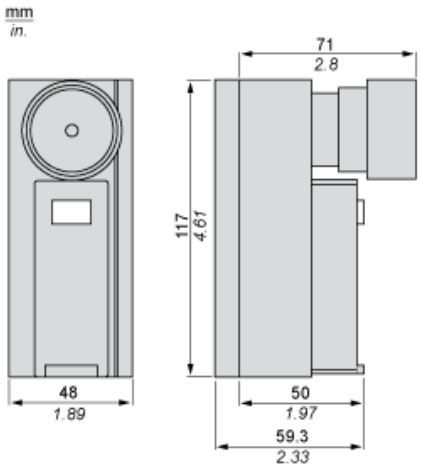

## Mounting and Clearance

### Laser Alignment Device

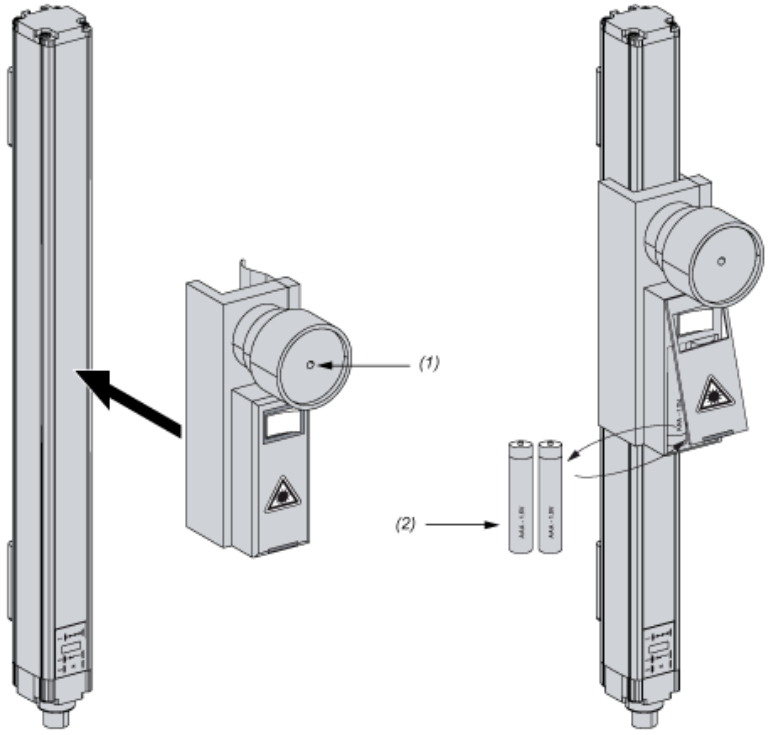


(1) Position of the laser beam
(2) 2 AAA batteries (not part of package)