Mod. 2612 - Sprint fittings Serie S2000

Product code: 2612 3/8

Datasheet creation date: 10/03/2025 02:52

Check the most updated document online *click here*



TECHNICAL DATA

Model	2612 3/8

Products designed for industrial applications. General terms and conditions for sale are available on www.camozzi.com.
This document contains a brief description of the products offered by Camozzi Automation at time of publication.
For more complete and up to date information about the Camozzi Automation product range, please refer to our online catalogue at https://shop.camozzi.com

Mod. 2612 - Sprint fittings Serie S2000

Product code: 2612 3/8

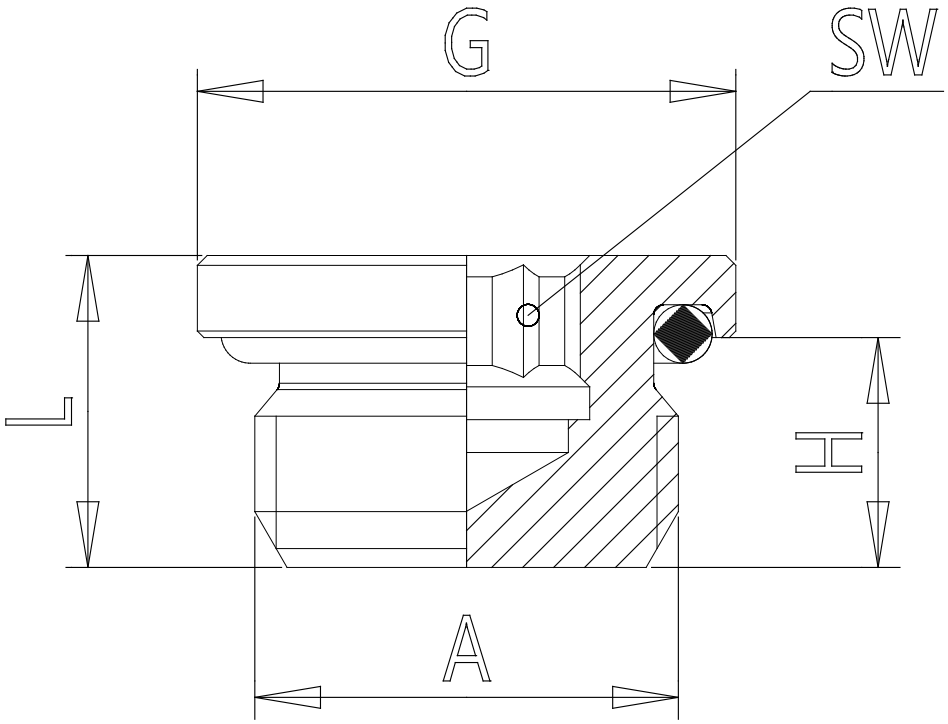

DIMENSIONS

A	G3/8
G	20.5
H	7.0
L	10.5
SW	8
Weight	17

Products designed for industrial applications. General terms and conditions for sale are available on www.camozzi.com.
This document contains a brief description of the products offered by Camozzi Automation at time of publication.
For more complete and up to date information about the Camozzi Automation product range, please refer to our online catalogue at https://shop.camozzi.com