N7R29A

Inductive NAMUR ring sensor

I7R2010-NL/2M/1G/1D

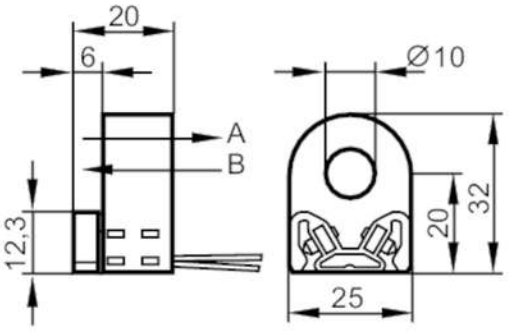

A direction of movement A
B direction of movement B

Product characteristics		
Electrical design		NAMUR
Output function		normally closed
Housing		circular
Dimensions	[mm]	32 x 25 x 20
Application		
Operating principle		bistable
Electrical data		
Connection to switching amplifiers		yes
Switching amplifiers		connection to certified intrinsically safe circuits with the max. values: U = 15 V / I = 50 mA / P = 120 mW
Nominal voltage DC	[V]	8.2; (1kΩ)
Current consumption	[mA]	value for direction of movement A : < 1,2; value for direction of movement B : > 2,1
Protection class		III
Outputs		
Electrical design		NAMUR
Output function		normally closed
Detection zone		
Measuring ball (diameter)	[mm]	4
Max. travel speed	[m/s]	10
Accuracy / deviations		
Hysteresis	[mm]	2
Operating conditions		
Ambient temperature	[°C]	-40...100
Note on ambient temperature		max. temperature span: 100 K
Protection		IP 67
Tests / approvals		
Approval		BVS 08 ATEX E026; IECEx BVS 09.0016
ATEX marking		II 1G Ex ia IIC T4 Ga

N7R29A

Inductive NAMUR ring sensor

I7R2010-NL/2M/1G/1D

		II 1D Ex ia IIIC T125°C Da
EMC		EN 60947-5-2
MTTF	[years]	1256
Safety classification		
Max. internal capacitance	[nF]	90
Max. internal inductance	[µH]	90
Mechanical data		
Weight	[g]	68
Housing		circular
Dimensions	[mm]	32 x 25 x 20
Inside diameter	[mm]	10
Materials		PA 12-GF30
Remarks		
Pack quantity		1 pcs.
Electrical connection		

Cable: 2 m; 2 x 0.14 mm², PTFE

Connection

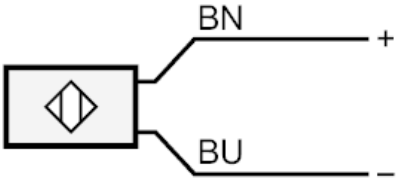

	Core colours :
BN =	brown
BU =	blue