E1003A

Wirable socket

SDOAJ040PLNFKPG/1D/1G

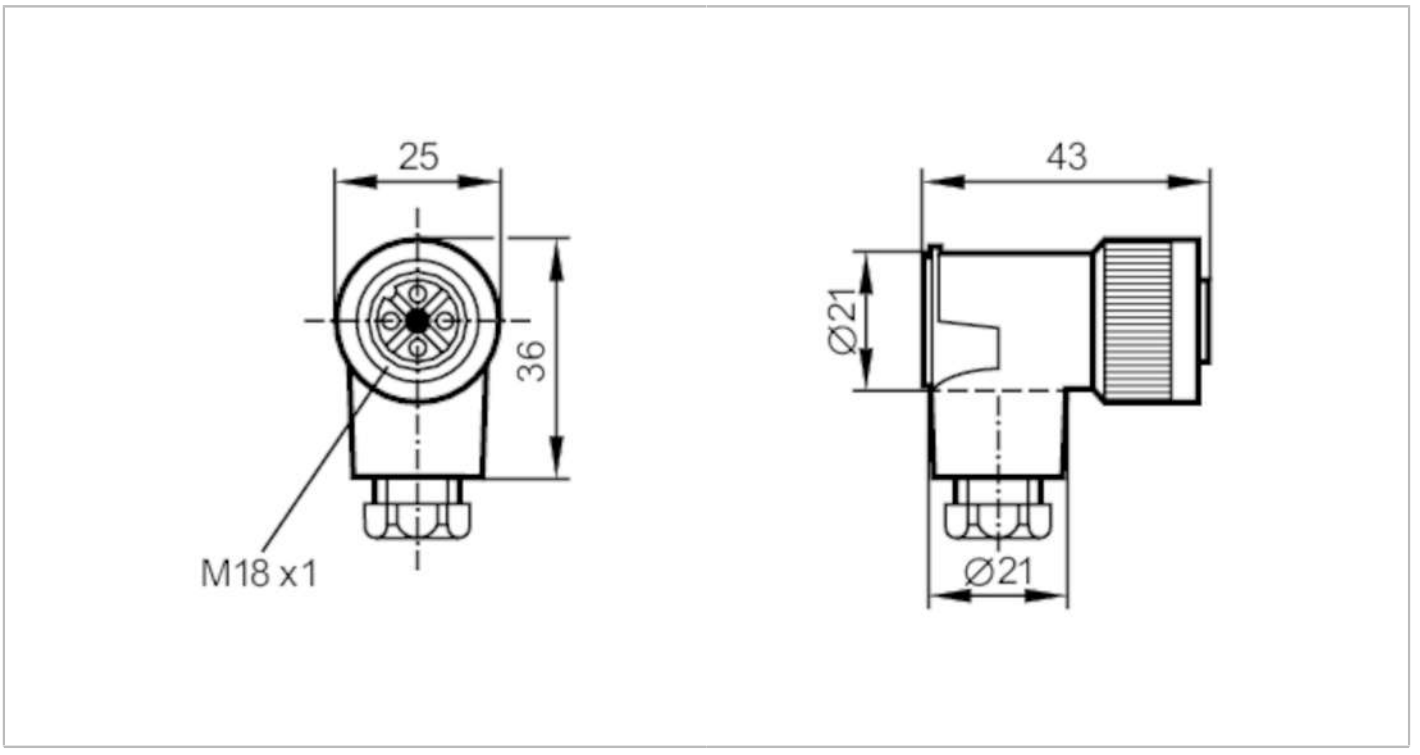

CE

Application		
Application		connection to certified intrinsically safe circuits
Operating conditions		
Ambient temperature	[°C]	-20...80
Protection		IP 65
Tests / approvals		
Approval		BVS 05 ATEX E106
ATEX marking		II 1G Ex ia IIC T6 Ga
		II 1D Ex ia IIIB T85°C Da
		II 1D Ex ia IIIC T85°C Da
Mechanical data		
Weight	[g]	41.2
Dimensions	[mm]	43 x 25 x 36
Materials		PBT
Moulded-body material		PBT
Material nut		PA
Remarks		
Remarks		Ta according to table "Total power of the current circuits" in the corresponding operating instructions (safety-related part ATEX)
		Several intrinsically safe circuits may be connected to the sockets.
		The sum of the voltages of one or more intrinsically safe circuits must not exceed the following value:
		Utotal max = 60 V (peak value)
Pack quantity		1 pcs.

E1003A

Wirable socket

SDOAJ040PLNFKPG/1D/1G

Electrical connection

terminals: ...0.75 mm²; Cable sheath: Ø 6...8 mm

Electrical connection - socket

Connector: 1 x M18, angled; coding: A; Moulded body: PBT; Locking: PA

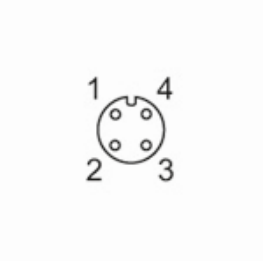

Connection

