# DATASHEET - EMT6(230V)



**Thermistor overload relay for machine protection, 230V50/60Hz, without lock**

| | |
|---|---|
| **Part no.** | **EMT6(230V)** |
| **Catalog No.** | **066400** |
| **Alternate Catalog No.** | **EMT6(230V)** |
| **EL-Nummer (Norway)** | **4131786** |

## Delivery program

| | | | |
|---|---|---|---|
| Product range | | | EMT6 thermistor overload relay for machine protection |
| Function | | | Without manual reset<br>Mains and fault LED display<br>Test button |
| **Rated operational current** | | | |
| AC-15 | | | |
| 240 V | $I_e$ | A | 3 |
| AC--14 | | | |
| 300 V | $I_e$ | A | 3 |
| 400 V | $I_e$ | A | 3 |
| | | | Value applies starting with release 001. |
| conventional thermal current | $I_{th}$ | A | 6 |
| Rated control voltage | $U_s$ | V | 230 V 50/60 Hz |

**Notes**

Observe manual MN03407006Z-DE/EN.

Can be snap fitted on a top-hat rail to IEC/EN 60715.

## Technical data

### General

| | | | |
|---|---|---|---|
| Standards | | | IEC/EN 60947, VDE 0660, EN 55011 |
| Climatic proofing | | | Damp heat, constant, to IEC 60068-2-78; Damp heat, cyclic, to IEC 60068-2-30 |
| Ambient temperature | | | |
| Open | | °C | -25 - +60 |
| Enclosed | | °C | - 25 - 45 |
| Storage | | °C | - 45 - 85 |
| Mounting position | | | As required |
| Weight | | kg | 0.15 |
| Mechanical shock resistance half-sinusoidal shock 10 ms to IEC 60068-2-27 | | g | 10 |
| Degree of Protection | | | IP20 |
| Protection against direct contact when actuated from front (EN 50274) | | | Finger and back-of-hand proof |
| Safe isolation to EN 61140 | | | |
| between the contacts | | V AC | 250 |
| between contacts and power supply | | V AC | 250 |

### Auxiliary and control circuits

| | | | |
|---|---|---|---|
| Rated impulse withstand voltage | $U_{imp}$ | V AC | 4000 |
| Rated impulse withstand voltage | $U_{imp}$ | V AC | 6000 |
| | | | Value applies starting with release 001. |
| Overvoltage category/pollution degree | | | III/3 |
| Terminal capacities Auxiliary and control circuits | | | |
| Solid | | $mm^2$ | 1 x (0.5 - 2.5)<br>2 x (0.5 - 1.5) |
| Flexible with ferrule | | $mm^2$ | 1 x (0.5 - 2.5)<br>2 x (0.5 - 1.5) |
| Solid or stranded | | AWG | 20 - 14 |
| Terminal screw | | | M3.5 |
| Tightening torque | | Nm | 1.2 |

| | | | |
|---|---|---|---|
| Tools | | | |
| Pozidriv screwdriver | | Size | 2 |
| Standard screwdriver | | mm | 1 x 6 |

## Auxiliary power circuit

| | | | |
|---|---|---|---|
| Rated insulation voltage | $U_i$ | V | 300 |
| Rated insulation voltage | $U_i$ | V | 400 |
| | | | Value applies starting with release 001. |
| Rated operational current | $I_e$ | A | |
| AC--14 | | | |
| Make contact | | | |
| 300 V | $I_e$ | A | 3 |
| 380 V 400 V 415 V | $I_e$ | A | 3 |
| | | | Value applies starting with release 001. |
| Break contact | | | |
| 300 V | $I_e$ | A | 3 |
| 380 V 400 V 415 V | $I_e$ | A | 3 |
| | | | Value applies starting with release 001. |
| AC-15 | | | |
| Make contact | | | |
| 220 V 230 V 240 V | $I_e$ | A | 3 |
| 300 V | $I_e$ | A | 1 |
| 380 V 400 V 415 V | $I_e$ | A | 1 |
| | | | Value applies starting with release 001. |
| Break contact | | | |
| 220 V 230 V 240 V | $I_e$ | A | 3 |
| 300 V | $I_e$ | A | 1 |
| 380 V 400 V 415 V | $I_e$ | A | 1 |
| | | | Value applies starting with release 001. |
| Max. short-circuit protective device | | | |
| Fuse | gG/gL | A | 6 |

## Control circuit

| | | | |
|---|---|---|---|
| Rated insulation voltage | $U_i$ | V | 240 |
| Rated operational voltage | $U_e$ | V | 230 |
| Pick-up and drop-out values | | x $U_e$ | 0.85 - 1.1 |
| Power consumption | | | |
| AC | | VA | 3.5 |
| DC | | W | 2 |
| Trip at approx. | | Ω | 3600 |
| Recovery at approx. | | Ω | 1600 |
| Sensor circuit | | | Sensor circuit parameters at $U_S$ and +20 °C:<br>max. Cable length to sensor 250m (not insulated)<br>Total cold resistance $\sum R_K \leq 1500\ \Omega$<br>- $R_{T1\text{-}T2}$ (T1, T2 shorted): $I_{T1\text{-}T2}$ = 1.9 mA<br>- $R_{T1\text{-}T2}$ (4 kΩ): $U_{T1\text{-}T2}$ = max. 3 V DC, $I_{T1\text{-}T2}$ = max. 0.8 mA<br>- $R_{T1\text{-}T2}$ (T1, T2 open): $U_{T1\text{-}T2}$ = 5.1 V DC typ. (5.5 V DC max.) |

## Electromagnetic compatibility (EMC)

| | | | |
|---|---|---|---|
| Electrostatic discharge (ESD) | | | |
| applied standard | | | IEC/EN 61000-4-2 |
| Air discharge | | kV | 8 |
| Contact discharge | | kV | 6 |
| Electromagnetic fields (RFI) | | | |
| applied standard | | | IEC/EN 61000-4-3 |
| | | V/m | 80 - 1000 MHz: 10<br>1.4 - 2 GHz: 3<br>2.0 - 2.7 GHz: 1 |
| Radio interference suppression | | | EN 55011<br>Class B |
| Burst | | kV | Supply cables: 2 |

| | | | |
|---|---|---|---|
| | | | Signal cables: 1<br>according to IEC/EN 61000-4-4 |
| power pulses (Surge) | | | 2 kV (symmetrical)<br>4 kV (asymmetrical)<br>according to IEC/EN 61000-4-5 |
| Immunity to line-conducted interference to (IEC/EN 61000-4-6) | | V | 10 |

## Design verification as per IEC/EN 61439

| | | | |
|---|---|---|---|
| Technical data for design verification | | | |
| Rated operational current for specified heat dissipation | $I_n$ | A | 0 |
| Heat dissipation per pole, current-dependent | $P_{vid}$ | W | 0 |
| Equipment heat dissipation, current-dependent | $P_{vid}$ | W | 0 |
| Static heat dissipation, non-current-dependent | $P_{vs}$ | W | 1.5 |
| Heat dissipation capacity | $P_{diss}$ | W | 0 |
| Operating ambient temperature min. | | °C | -25 |
| Operating ambient temperature max. | | °C | 60 |

## Technical data ETIM 7.0

Relays (EG000019) / Temperature monitoring relay (EC001446)

Electric engineering, automation, process control engineering / Low-voltage switch technology / Monitoring equipment (low-voltage switch technology) / Temperature monitoring equipment (ecl@ss10.0.1-27-37-18-10 [AKF104014])

| | | | |
|---|---|---|---|
| Type of electric connection | | | Screw connection |
| Rated control supply voltage Us at AC 50HZ | | V | 230 - 230 |
| Rated control supply voltage Us at AC 60HZ | | V | 230 - 230 |
| Rated control supply voltage Us at DC | | V | 0 - 0 |
| Voltage type for actuating | | | AC |
| With detachable clamps | | | No |
| Number of measuring circuits | | | 1 |
| Error registration possible | | | No |
| External reset possible | | | No |
| Number of contacts as normally closed contact | | | 1 |
| Number of contacts as normally open contact | | | 1 |
| Number of contacts as change-over contact | | | 0 |
| Temperature measuring range | | °C | 0 - 0 |
| Resistance measuring range | | Ohm | 750 - 12000 |
| Width | | mm | 23 |
| Height | | mm | 84 |
| Depth | | mm | 104 |

## Approvals

| | | | |
|---|---|---|---|
| Product Standards | | | UL 508; CSA-C22.2 No. 14; IEC/EN 60947-8; CE marking |
| UL File No. | | | E29184 |
| UL Category Control No. | | | NKCR |
| CSA File No. | | | 12528 |
| CSA Class No. | | | 3211-03 |
| North America Certification | | | UL listed, CSA certified |
| Specially designed for North America | | | No |
| Max. Voltage Rating | | | 600 V AC |
| Degree of Protection | | | IEC: IP20, UL/CSA Type: - |

## Characteristics

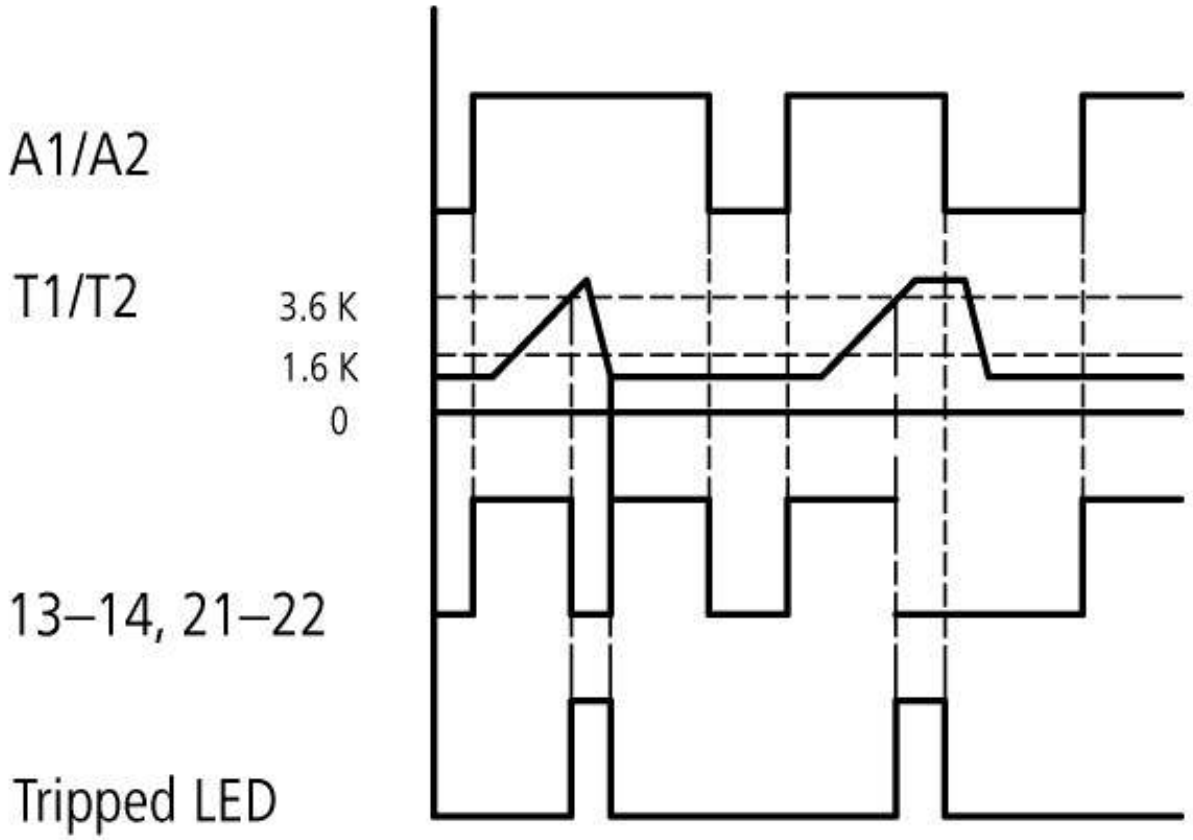


## Dimensions

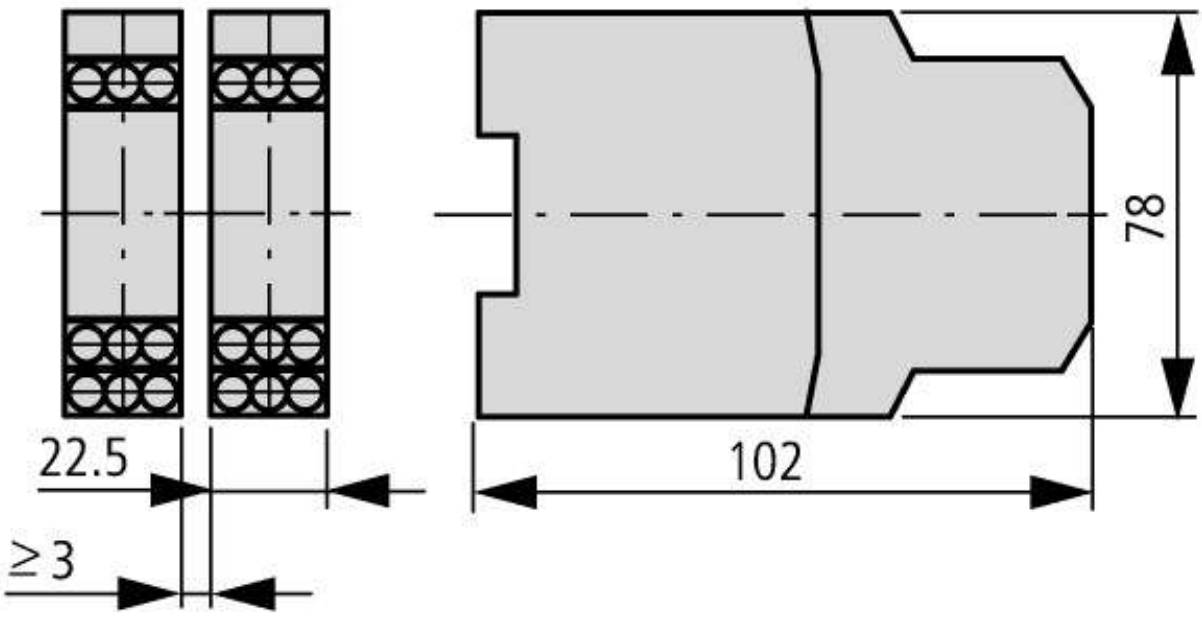

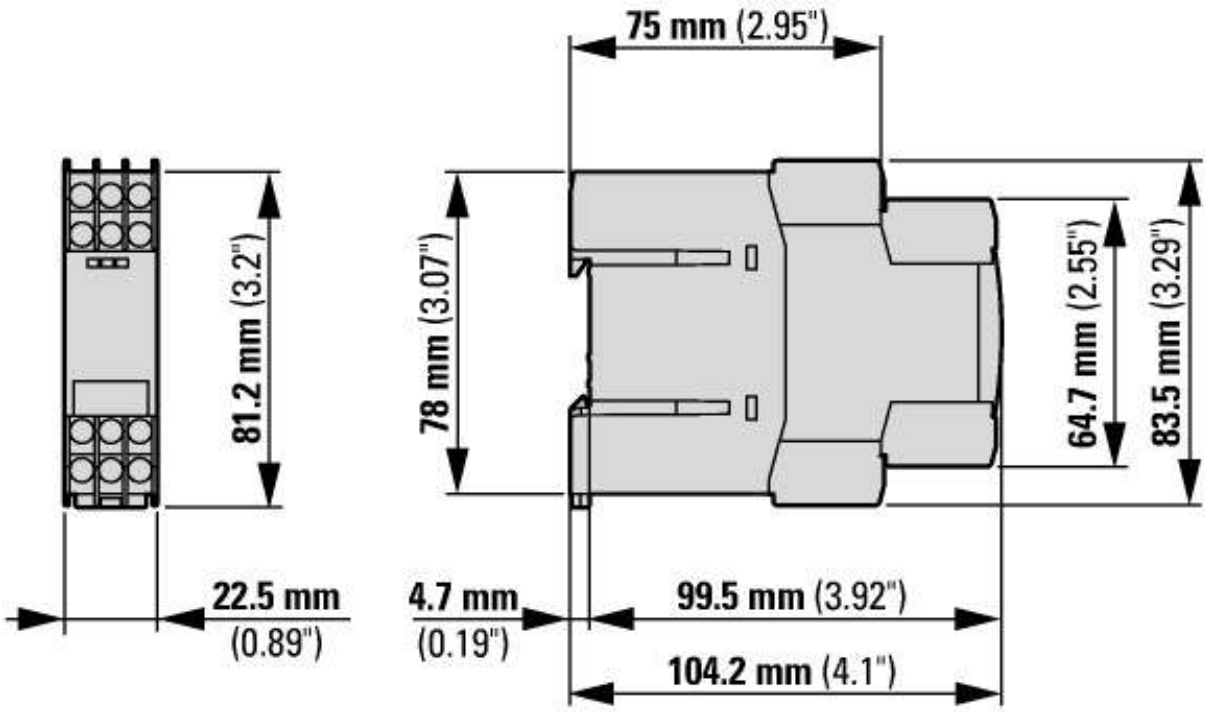


Applies to release 001 and higher


© 02/2021 by Eaton Industries GmbH