Technical Data Sheet

Die-Cast Aluminium Switch Disconnectors

CDPD56
Issue 1

General Description

The 'i-switch' die cast range provides the user with a product that will withstand a good deal of rough treatment. With sealing to IP66 these assemblies can be placed in environments where resistance to impacts, moisture and dust/dirt are a concern. The option to add a selection of auxiliary blocks providing additional contacts and a choice of Neutral assemblies increases the flexibility of the product range.



Size A & Size B enclosures as Switch-Disconnectors in both Red & Grey

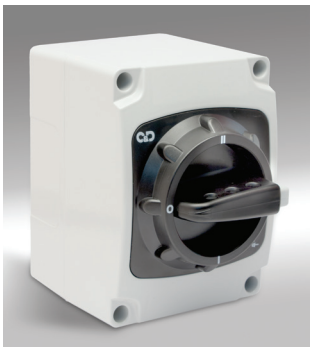

20A Changeover Switch-Disconnector in a size A enclosure

Switch-Disconnectors (O-I)

C/O Switch-Disconnectors (I-O-II)

Catalogue Numbers

Rating	Format	Interior Switch product range	Catalogue Nos.		Enclosure Size (IP66)
			Grey	Red	
20A	6P	GX20	SDDG206	SDDR206	A
	6P+2EB Aux	GX20	SDDG206EB	SDDR206EB	
25A	2P	CS25	SDDG252	SDDR252	A
	3P	CS25	SDDG253	SDDR253	
	3P+NL	CS25	SDDG253NL	SDDR253NL	
	3P+N	CS25	SDDG253N	SDDR253N	
	3P+2EB Aux	CS25	SDDG253EB	SDDR253EB	
32A	2P	CS32	SDDG322	SDDR322	A
	3P	CS32	SDDG323	SDDR323	
	3P+NL	CS32	SDDG323NL	SDDR323NL	
	3P+N	CS32	SDDG323N	SDDR323N	
	3P+2EB Aux	CS32	SDDG323EB	SDDR323EB	
40A	2P	CS40R	SDDG402X	SDDR402X	A
	3P	CS40R	SDDG403X	SDDR403X	
	3P+NL	CS40R	SDDG403NLX	SDDR403NLX	
	3P+N	CS40R	SDDG403NX	SDDR403NX	
	3P+2EB Aux	CS40R	SDDG403EBX	SDDR403EBX	
	2P	CS40R	SDDG402	SDDR402	B
	3P	CS40R	SDDG403	SDDR403	
	3P+NL	CS40R	SDDG403NL	SDDR403NL	
	3P+N	CS40R	SDDG403N	SDDR403N	
	3P+2EB Aux	CS40R	SDDG403EB	SDDR403EB	
	6P	GX40	SDDG406	SDDR406	
	6P+2EB Aux	GX40	SDDG406EB	SDDR406EB	
63A	2P	CS63	SDDG632	SDDR632	B
	3P	CS63	SDDG633	SDDR633	
	3P+NL	CS63	SDDG633NL	SDDR633NL	
	3P+N	CS63	SDDG633N	SDDR633N	
	3P+2EB Aux	CS63	SDDG633EB	SDDR633EB	
	6P	CS63	SDDG636	SDDR636	
	6P+2EB Aux	CS63	SDDG636EB	SDDR636EB	
80A	3P	CS80	SDDG803	SDDR803	B
	3P+NL	CS80	SDDG803NL	SDDR803NL	
	3P+N	CS80	SDDG803N	SDDR803N	

Rating	Format	Interior Switch product range	Cat. No.	Enclosure Size (IP66)
20A	2P	GX20	SCODDG202	A
	3P	GX20	SCODDG203	
	4P	GX20	SCODDG204	
40A	2P	GX40	SCODDG402	B
	3P	GX40	SCODDG403	
	4P	GX40	SCODDG404	

'N' = switched neutral (Early make, late break)
'NL' = Unswitched neutral
'EB' = Early break auxiliary contacts
'X' = Bottom cable entries only. For top and bottom cable entries, replace 'X' with 'Y' in the catalogue reference. i.e. SDDG402Y

Accessories

Applicable to type 'CS' interiors only

Description	Cat. No.
Auxiliary Contact - 2 Early Break	SAUX2EB
Auxiliary Contact - 1 N/O + 1 N/C	SAUXCO
25A - 40A Compact Neutral (Unswitched)	SNLC40
63A Neutral (Unswitched)	SNL63
80A Neutral (Unswitched)	SNL80
25A Neutral (Switched)	SSP25
32A & 40A Neutral (Switched)	SSP40
63A Neutral (Switched)	SSP63
80A Neutral (Switched)	SSP80

Safety Features

Screwed lid enclosures have always been open to abuse by having the lid removable when the isolator is 'Off' and padlocked. This would allow the switch shaft to be turned manually to the 'On' position, thus defeating the safety padlocking feature.

The 'i-switch' range now incorporates a mechanical interlock which when a padlock is inserted prevents the enclosure lid from being removed.

CRAIG & DERRICOTT

www.craigandderricott.com

Craig & Derricott Ltd
Hall Lane, Walsall Wood,
Walsall, West Midlands WS9 9DP
t: +44(0)1543 375541 f: +44(0)1543 361619
e: sales@craigandderricott.com

Die-Cast Aluminium Switch Disconnectors

CDPD56
Issue 1

Enclosure

Material
Die cast aluminium alloy LM24 (BS1490)

Paint finish
Grey - RAL 7035
Red - RAL 3020.

Entries

Size A	**20A - 32A**
Std Cat No.	: 2xM20 on bottom face
Suffix X	: 2xM25 on bottom face
Suffix Y	: 2xM25 on bottom face & 2xM25 on top face
Size A	**40A**
Std Cat No.	: 2xM25 on bottom face
Suffix X	: 2xM25 on bottom face
Suffix Y	: 2xM25 on bottom face & 2xM25 on top face
Size B	**40A**
Std Cat No.	: 2xM25 + 1xM20 on bottom face
Size B	**63A**
Std Cat No.	: 2xM25 + 1xM20 on bottom face
Suffix X	: 2xM32 +1xM16 on bottom face
Suffix Y	: 2xM32 +1xM16 on bottom face & 2xM32 on top face
Size B	**80A**
Std Cat No.	: 2xM32 + 1xM20 on bottom face
Suffix X	: 2xM32 +1xM16 on bottom face
Suffix Y	: 2xM32 +1xM16 on bottom face & 2xM32 on top face

Maximum number of possible entries:-
Size A - 4 (2 Top+2 Bottom).
Size B - 6 (3 Top+3 Bottom).

Cover Screws
Stainless Steel (Captive)

Earthing
Terminals are provided on both lid and base to allow full earth continuity to be maintained.

Mounting
All fixings are internal but outside of the IP66 sealed area. Guide channels are provided to assist with the fixing screw location.

Switch-Disconnectors

2, 3 & 6 Pole	Type **CS** - base mounted. (Accepts add-on Aux. blocks & Neutrals, see page 13 for ratings)
6 Pole	Type **GX** - base mounted. (also available with 2 E/B Aux.)

Changeover Switch-Disconnectors

2, 3 & 4 Pole	Type **GX** - base mounted.

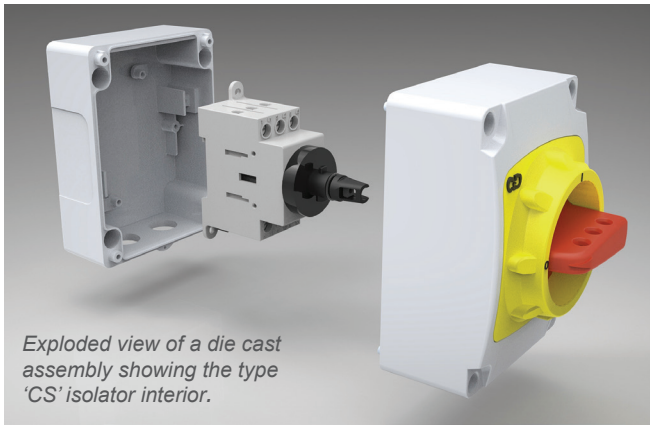

Exploded view of a die cast assembly showing the type 'CS' isolator interior.

The size 'B' enclosure is available with 'Start/Stop' or 'Start/Emergency Stop' pushbuttons.



...products for the real world

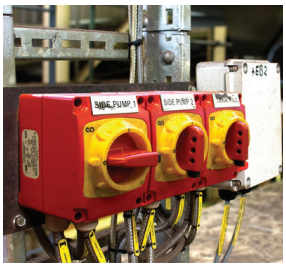





CRAIG & DERRICOTT

www.craigandderricott.com

Craig & Derricott Ltd
Hall Lane, Walsall Wood,
Walsall, West Midlands WS9 9DP
t: +44(0)1543 375541 f: +44(0)1543 361619
e: sales@craigandderricott.com

Die-Cast Aluminium Switch Disconnectors

CDPD56
Issue 1

Technical Specification

Data supplied against tests to IEC/BS EN 60947-3				Rating									
Application	Sym.	Unit	Category	20A	25A	32A		40A		63A		80A	100A
Switch product range	-	-		GX20	CS25	GX32	CS32	GX40	CS40R	GN63	CS63	CS80	CS100
Rated thermal current	I_{the}	A		20	25	32	32	40	40	63	63	80	100
Rated insulation voltage	U_i	V		690	690	690	690	690	690	690	690	690	1000
Rated impulse voltage	U_{imp}	kV		6	6	6	6	6	6	6	6	6	8.0
Rated operational power(3 phase AC)		kW	380/440 - AC23	7.5	11	15	15	18.5	15	30	25	30	59
			500V - AC23	7.5	15	15	15	15	15	30	30	37	63
			690V - AC23	7.5	15	15	15	15	15	30	30	30	51
Rated short time withstand current (1 sec)	I_{cw}	A		250	500	800	600	800	600	1600	1300	1400	2600
Max. fuse size for short circuit protection (gG Characteristic)		kA	10kA	20	35	35	35	40	40	63	80	80	160
			25kA	16	32	35	32	35	32	63	63	63	160
			50kA	-	32	-	32	-	32	63	63	63	160
Recommended connecting capacity		-	Terminal type										
		mm^2	Flexible cable	2.5 x 2	6	6 x 2	6	6 x 2	6	10	16	16	50
		mm^2	Rigid cable	2.5 x 2	10	10 x 2	10	10 x 2	10	16	25	25	70
		Nm	Tightening torque	1.0	1.2	1.0	1.2	1.0	1.2	1.2	1.2	1.2	2

Dimensions

Size A

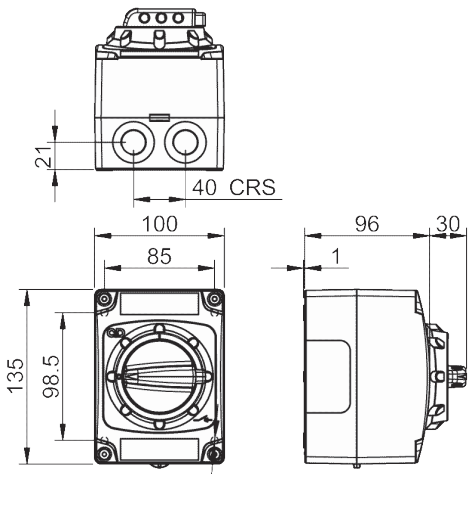

Size B

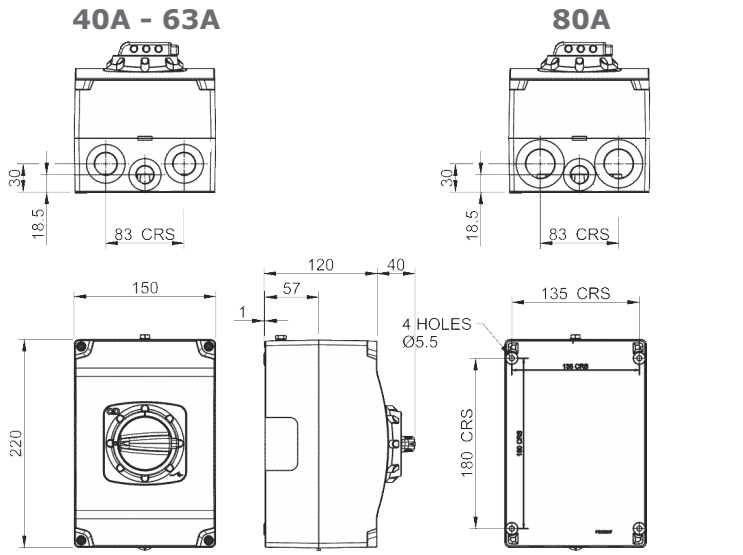

Craig & Derricott Ltd
Hall Lane, Walsall Wood,
Walsall, West Midlands WS9 9DP
t: +44(0)1543 375541 f: +44(0)1543 361619
e: sales@craigandderricott.com