REV.	N° ECR	NATURE OF MODIFICATION	DATE	VISA

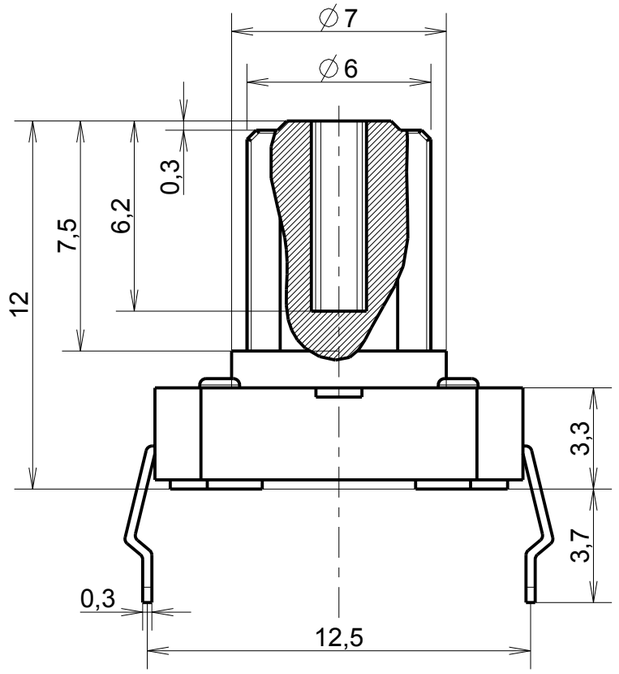

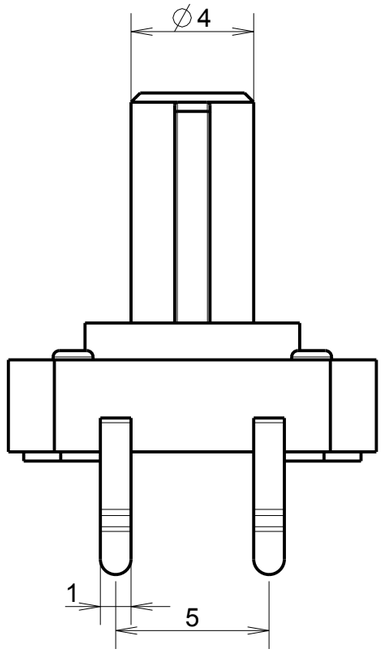

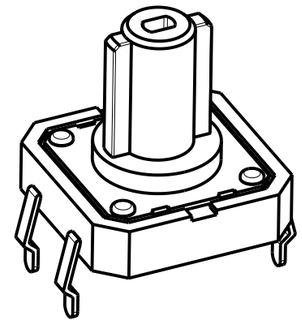

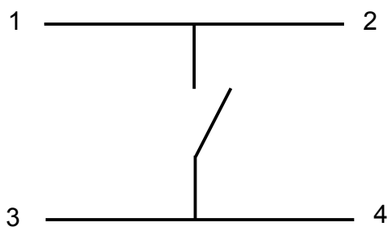

SCHEMATIC

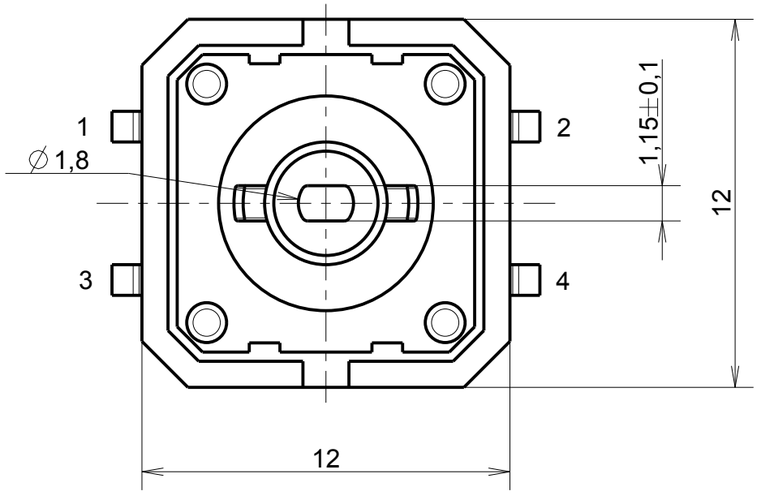

PTS 125 SX12-2 LFS

Actuation Force
M: 180 gf
K: 250gf

PART NUMBER	DESIGNATION	ACTUATOR FORCE	ACTUATOR COLOR
Y97AT21A2LAFP	PTS 125 SM12-2 LFS	180gf	Brown
Y97AT21A5LAFP	PTS 125 SK12-2 LFS	250 gf	Black

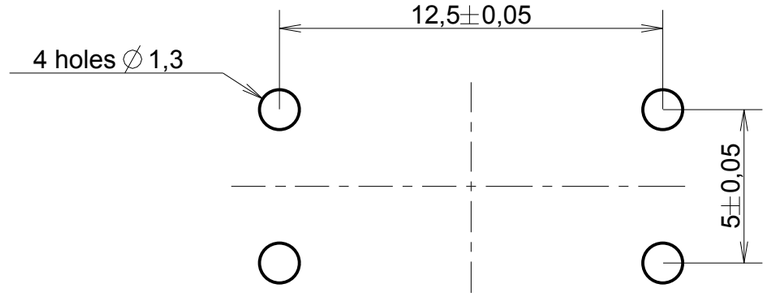

RECOMMENDED PCB LAYOUT

Material: .	Traitement: .	Protection: .	Volume: .
UNLESS OTHERWISE : - DIMENSIONS GIVEN BEFORE PROTECTION - BURRS AND SHARP EDGES DELETED		ANGULAR TOLERANCE ± 3 ° LINEAR TOLERANCE ± 0,2 SURFACE FINISH Ra . µ	CRITICAL DIMENSIONS ▼ . SPC DIMENSIONS ▼ .
CREATE BY RIFFAUD	DATE 09/04/14		MODIFIED ON THIS REV. ●
CHECKED BY Hurtard, Stephane	DATE 26/06/14	MODIFICATION see revision table on the first sheet REPLACE	
APPROVED BY Kubat, Laurent	DATE 26/06/14	FILENAME CU97M05125FP STATE OFFICIEL	
C&K		SCALE 5,00	DRAWING DESCRIPTION PTS 125 SX12-2 LFS
BP 359 - 39105 Dole - FRANCE -		SIZE A3 / SHEET 1 / 1	DRAWING NUMBER CU97M05125FP REV -

THIS DRAWING IS THE PROPERTY OF C&K COMPONENTS SAS.
IT CAN NOT BE REPRODUCED OR TRANSMITTED
WITHOUT THE WRITTEN PERMISSION OF C&K COMPONENTS SAS.