PS510-10V-01-2UPN8-H1141
Pressure sensor – Relative Pressure: -1…10 Bar

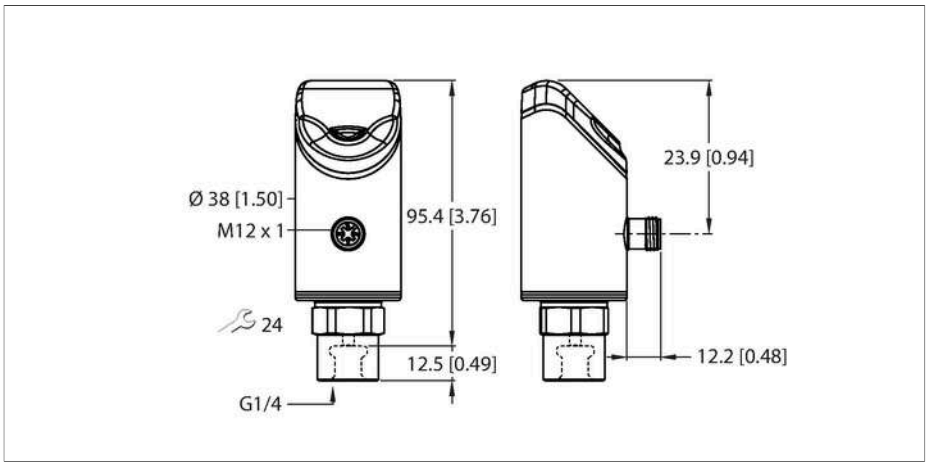

Technical data

Type	PS510-10V-01-2UPN8-H1141
Ident. no.	100004760
Medium temperature	-30…+80 °C
Application area	Liquids and gases
Pressure range	
Relative pressure	-1…10 bar rel.
	-14.5…145.04 psi
	-0.1…1 MPa
Admissible overpressure	≤ 70 bar
Burst pressure	≥ 140 bar
Response time	≤ 500 ms
Electrical data	
Operating voltage	18…33 VDC
Short-circuit/reverse polarity protection	yes, cyclic / yes (voltage supply)
Capacitive load	100 nF
Insulation class	III
Outputs	
Output 1	Switching output or IO-Link mode
Output 2	switching output
Switching output	
Communication protocol	IO-Link
Output function	NO/NC, PNP/NPN
Accuracy	± 0.25 % of final value BSL
Rated operational current	0.25 A
Switching frequency	≤ 300 Hz
Switching point distance	≥ 0.5 %

Features

- 4-digit, two-colored, 14-segment display, rotatable by 180°
- Housing is rotatable after plugging the process connection
- Metal measuring cell
- 18…33 VDC
- NO/NC contact, PNP/NPN output, IO-Link
- Process connection G1/4" female thread
- Plug-in device, M12 × 1

Wiring diagram

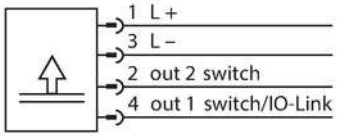

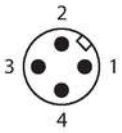

Functional principle

The pressure sensors from the P510 product series operate with fully welded metal measuring cells. As a result of the pressure acting on the metal substrate, a signal that is proportional to the pressure is generated and processed electronically. The processed signal is available either as a switching or an analog output with an accuracy of 0.25% of full scale. The rotatable sensor body and a variety of process connections guarantee flexible process integration.

PS510-10V-01-2UPN8-H1141| 30-01-2020 14-39 | Technical modifications reserved

Technical data

Switch point:	(min. + 0.005 x range) up to 100 % of full scale
Release point(s)	min. up to (SP - 0.005 × range)
Switching cycles	≥ 100 mil.
IO-Link	
IO-Link specification	V 1.1
IO-Link port type	Class A
Transmission physics	corresponds to 3-wire physics (PHY2)
Frame type	2.2
Transmission rate	COM 2/38.4 kbps
Process data width	16 bit
Measured value information	14 bit
Switchpoint information	2 bit
Programming	FDT/DTM
Accuracy	± 0.25 % of full scale BSL
Included in the SIDI GSDML	Yes
Programming	
Programming options	Switching/reversing points; PNP/NPN; opener/closer; hysteresis/window mode; damping; pressure unit; printhead memory
Mechanical data	
Housing material	Stainless-steel/Plastic, 1.4404 (316L)/ Polyarylamide 50 % GF UL 94 V-0
Materials (contact with media)	Stainless steel 1.4404 (316L)/1.4542
Process connection	G¼" female thread
Wrench size pressure connection / coupling nut	24
Max. tightening torque housing nut	35 Nm
Electrical connection	Connectors, M12 × 1
Protection class	IP6K6K / 6K7 / 6K9K
Environmental conditions	
Ambient temperature	-40…+80 °C
Storage temperature	-40…+100 °C
EMV	EN 61000-4-2 ESD:4 kV CD / 8 kV AD EN 61000-4-3 HF radiated: 15 V/m EN 61000-4-4 Burst: 2 kV EN 61000-6-2 0.5 kV, 42 Ω EN 61326-2-3
Reference conditions acc. to IEC 61298-1	
Temperature	15…+25 °C
Atmospheric pressure	860…1030 hPa abs.
Humidity	45…75 % rel.
Auxiliary power	24 VDC

PS510-10V-01-2UPN8-H1141| 30-01-2020 14-39 | Technical modifications reserved

Technical data

Display functions	
Display	4-digit, 12-segment display, rotatable by 180°. Red or green.
Switching state	2 × LEDs, Yellow
Unit display	5 x LEDs green (bar, psi, kPa, MPa, misc)
Temperature behaviour	
Temperature coefficient span T_{ks}	± 0.1 % of full scale/10 K
Temperature coefficient zero point Tk0	± 0.1 % of full scale/10 K
MTTF	110 years acc. to SN 29500 (Ed. 99) 40 °C

Accessories

Dimension drawing	Type	Ident. no.	
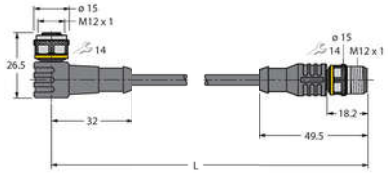	**WKC4.4T-2-RSC4.4T/TXL**	**6625640**	Extension cable, M12 female, angled, 4-pin to M12 male, straight, 4-pin, cable length: 2 m, jacket material: PUR, black; cULus approval; other cable lengths and qualities available, see www.turck.com
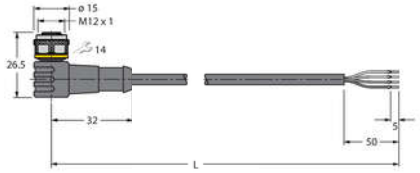	**WKC4.4T-2/TXL**	**6625515**	Connection cable, female M12, angled, 4-pin, cable length: 2 m, sheath material: PUR, black; cULus approval; other cable lengths and qualities available, see www.turck.com

Accessories

Dimension drawing	Type	Ident. no.	
	USB-2-IOL-0002	**6825482**	IO-Link Master with integrated USB port

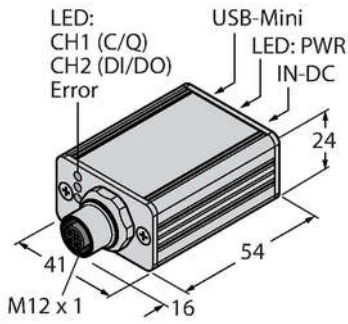

PS510-10V-01-2UPN8-H1141| 30-01-2020 14-39 | Technical modifications reserved