Metal sleeve

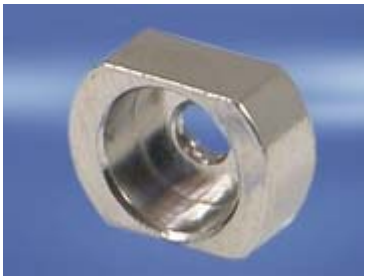

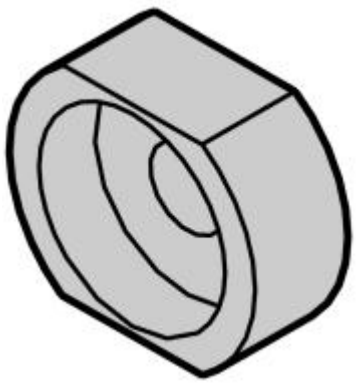

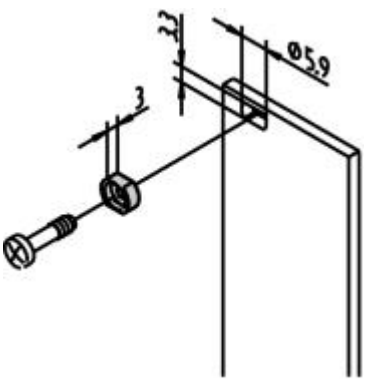

Front panel fixing

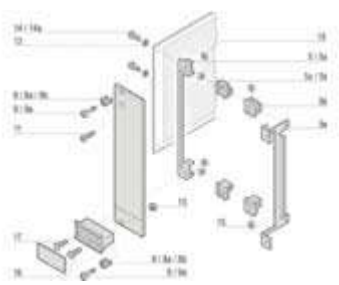

Item 8b, 3 U front panel mounting

Part no.: 21100-660

Features:

- Metal sleeves allow
  low ohmic contact between the collar screw and anodised partial front panel

Technical Information:

Description	Description	Qty/PU	Application
Metal sleeves	Brass, nickel-plated	100 piece	For shielded front panels

Note:

- Metal sleeves must be pressed into the front panels
- Not for partial width front panel 2 HP

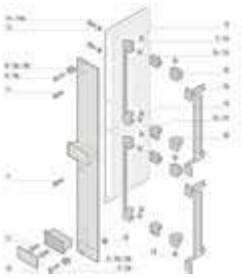

Item 8b, 6 U front panel mounting

Product illustrations are exemplary illustrations and can deviate from supplied products.