Inductive sensor

BES M18MD-PSC50B-BV02-003
BES04CY

BALLUFF
sensors worldwide

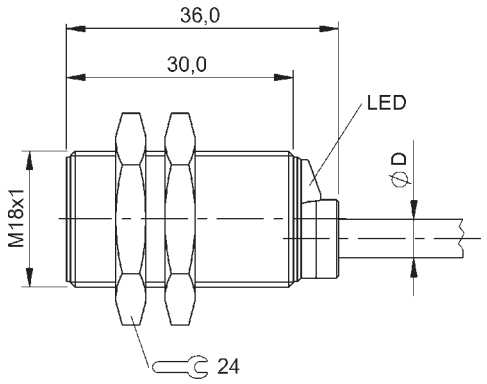

- **PNP**
- **Normally open (NO)**
- **5.00 mm**
- **Flush (shielded)**
- **Cable, PVC, 2.00 m**

LISTED IND. CONT. EQ. 81U2
for use in the secondary of a class 2 source of supply

IND. CONT. EQ
81U2
for use in the secondary of
a class 2 source of supply
Environmental - Type 1 Enclosure
LISTED

General attributes

Approvals / Conformity	CE cULus
Basic standard	IEC 60947-5-2
Enclosure Type per IEC 60529	IP67
Function indicator	Yes
Polarity reversal protected	Yes
Power indicator	No
Short circuit protected	Yes
Trademark	GLOBAL

Electrical attributes

Connection type	Cable
Eff. operating current Ie	200 mA
Eff. operating voltage Ue DC	24.0 V
Electrical version	DC, direct current
Load capacitance max. (at Ue)	1.000 µF
Max. no-load cur. Io undamped	3.0 mA
Minimum operating current Im	0 mA
No-load current Io damped max.	10.0 mA
Operating voltage UB max. DC [V]	30.0 V
Operating voltage UB min. DC [V]	10.0 V
Rated insulation voltage Ui	75 VDC
Rated short circuit current	100 A
Ripple max. (% of Ue)	15 %
Switching freq. f max. (at Ue)	700 Hz
Switching function	Normally open (NO)
Switching output	PNP
Voltage drop static max.	2.0 V

Mechanical attributes

Ambient temperature Ta max.	70 °C
Ambient temperature Ta min.	-25 °C
Assured operating distance Sa	4.00 mm
Cable diameter D max.	4.7 mm
Cable jacket material	PVC
Cable length	2.00 m
Conductor cross-section	0.34 mm²
Depth	36.0 mm
Diameter d1	M18x1
Eff. operating distance Sr	5.00 mm
Housing material	CuZn
Mech. installation condition	Flush (shielded)
Mounting length	30.0 mm
Number of conductors	3
Rated operating distance Sn [mm]	5.00 mm
Sensing face material	PBT
Surface protection	Nickel-plated
Tightening torque	25 Nm

Additional text
The sensor is functional again after the overload has been eliminated.

