BGL 30A-001-S49
BGL0016

30 mm
PNP

BALLUFF
sensors worldwide

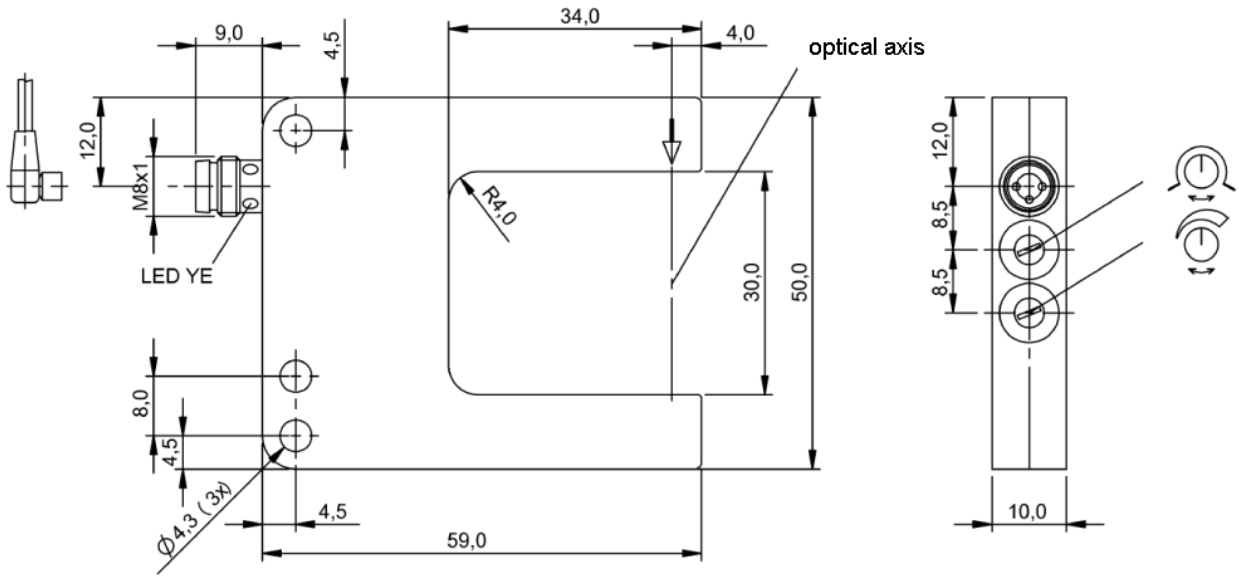

Electrical data:

Load current capacity max. (Ie)	200 mA
Switching output	PNP
Operating frequency (f)	1500 Hz
Current Consumption Io max. (No Load)	35 mA
Supply voltage min.	10 V
Supply voltage max.	30 V
Voltage drop Ud max. at Ie	3 V
Switching element function	NO/NC switchable
Hysteresis max (H)	=0,1

Mechanical data:

repeatibility	0,02 mm
Ambient temperature max.	+60 °C
Ambient temperature min.	-10 °C
weight	36 g
Sensing face material	Glass
Housing material	GD Zn
Resolution max.	0,3 mm
Slot width	30 mm

General data:

sensitivity adjustment	Potentiometer: 0...270°
Type	Fork-thru-beam
Function indication	yes, yellow LED
Short circuit protected	yes
Degree of protection IP	IP 67
Protected against polarity reversal	yes

Optical data:

Emitter type	red light
wave length of emitted Light	640
permissable ambient light	5000

Wiring:

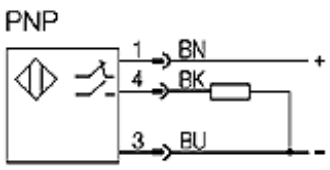

Pinout:
Pinout

