MS5013

Magnetic sensor

MS-3060-APKG/AS

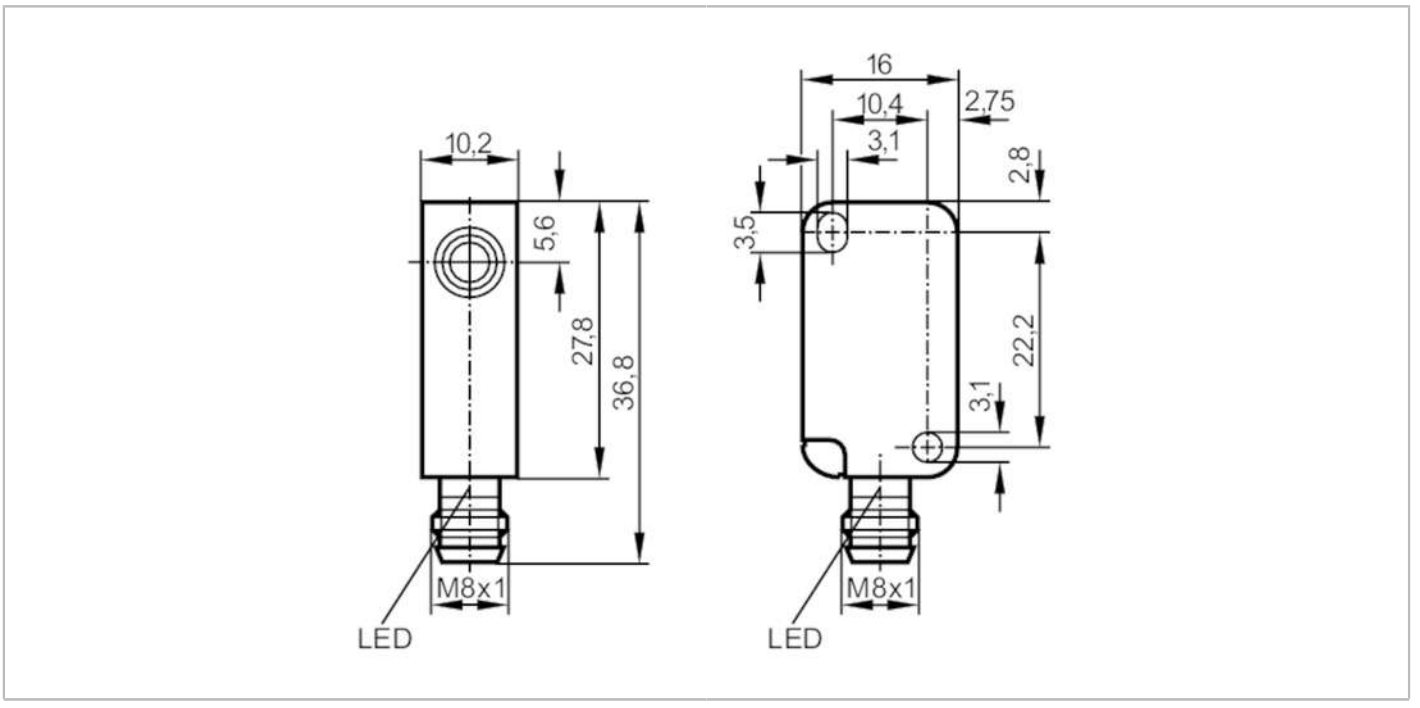

Product characteristics		
Electrical design		PNP
Output function		normally closed
Sensing range	[mm]	60; (referred to magnet M 4.0)
Housing		rectangular
Dimensions	[mm]	28 x 10 x 16
Application		
Special feature		Gold-plated contacts
Electrical data		
Operating voltage	[V]	10...30 DC
Current consumption	[mA]	< 10
Protection class		III
Reverse polarity protection		yes
Outputs		
Electrical design		PNP
Output function		normally closed
Max. voltage drop switching output DC	[V]	2.5
Permanent current rating of switching output DC	[mA]	200
Switching frequency DC	[Hz]	5000
Short-circuit protection		yes
Overload protection		yes
Detection zone		
Sensing range	[mm]	60; (referred to magnet M 4.0)

MS5013

Magnetic sensor

MS-3060-APKG/AS

Accuracy / deviations			
Hysteresis	[% of Sr]	1...10	
Operating conditions			
Ambient temperature	[°C]	-25...75	
Protection		IP 67	
Tests / approvals			
EMC		EN 61000-4-2 ESD	4 kV CD / 8 kV AD
		EN 61000-4-3 HF radiated	10 V/m
		EN 61000-4-4 Burst	2 kV
		EN 61000-4-5 Surge	0,5 kV line to line, Ri: 2 Ohm
		EN 61000-4-6 HF conducted	10 V
		EN 55011	class B
MTTF	[years]	2847	
Mechanical data			
Weight	[g]	18	
Housing		rectangular	
Dimensions	[mm]	28 x 10 x 16	
Materials		housing: PBT orange	
Displays / operating elements			
Display		switching status	1 x LED, yellow
Remarks			
Pack quantity		1 pcs.	

Electrical connection - plug

Connector: 1 x M8; coding: A; Contacts: gold-plated



Connection

