SAP P/N#	ENGINEERING NO.	LENGTH ± TOLERANCE
1200250007	WR5U26E03C300	11.81" +0.75"/-0" [30cm +1.90/-0 cm]

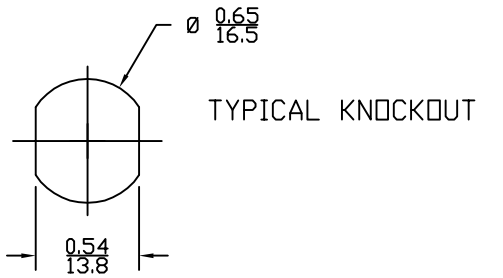

AUX VIEW
SCALE 1:2

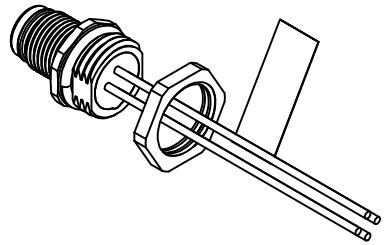

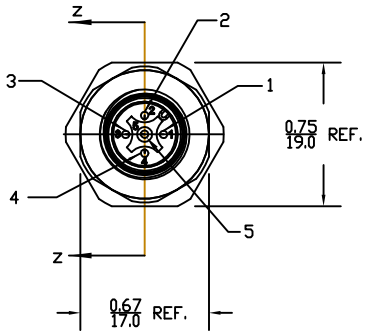

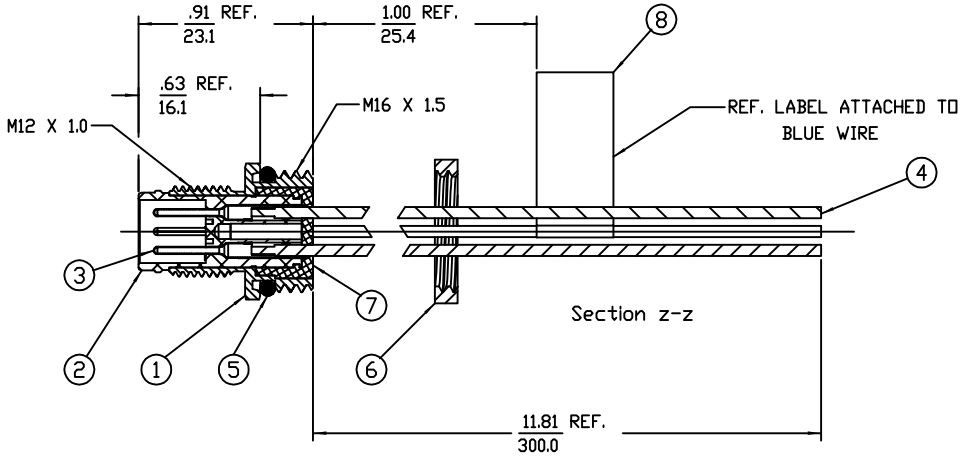

1	BROWN
2	WHITE
3	BLUE
4	BLACK
5	GRAY

WIRING DIAGRAM

NOTES:
1. MATERIAL: SEE TABLE
2. FINISHES: SEE TABLE
3. MATES WITH: ULTRA-LOCK FEMALE CORD ASSY
4. ELECTRICAL SPECIFICATIONS:
   VOLTAGE RATING: 60V AC/DC
   CURRENT RATING: 4 AMPS
5. ASSEMBLY IS RoHS COMPLIANT

ITEM	QTY.	DESCRIPTION	MATERIAL	FINISH
8	1	LABEL	PLASTIC FILM	BLACK/YELLOW
7	1	POTTING MATERIAL	EPOXY	
6	1	PANEL NUT, M16 X 1.5	Cu ALLOY	NICKEL PLATED
5	1	O-RING	NITRILE	BLACK
4	4	WIRE, 22 AWG (.34mm²)	PVC INSULATED	SEE WIRE DIAGRAM
3	5	CONTACT PIN	Cu ALLOY	GOLD PLATED
2	1	INSERT	NYLON	BLACK
1	1	RECEPTACLE SHELL	BRASS	NICKEL PLATED

SD RELEASE 8/28/09
EC NO: WEU2010-0046
DRWN: VOU
CH'KD: BWOODMAN2009/08/31
APPR: JFMURPHY 2009/08/31
DESCRIPTION
1
REV

QUALITY SYMBOLS
▼=0
Ⓒ=0

GENERAL TOLERANCES (UNLESS SPECIFIED)

	mm	INCH
4 PLACES	±----	±----
3 PLACES	±----	±.005
2 PLACES	±----	±.010
1 PLACE	±----	±.020
ANGULAR ±1°		

DRAFT WHERE APPLICABLE MUST REMAIN WITHIN DIMENSIONS

DIMENSION STYLE: INCH/MM
SCALE: 1:1
DESIGN UNITS: INCH
THIRD ANGLE PROJECTION

DRAWN BY VOU DATE 2009/08/28
CHECKED BY BWOODMAN DATE 2009/08/31
APPROVED BY JFMURPHY DATE 2009/08/28

TITLE: ULTRA-LOCK RECPT FPM M16 MALE 5P M12 A-CODE #22-1 PVC WIRES

molex MOLEX INCORPORATED

MATERIAL NO.: SEE CHART
DOCUMENT NO.: SD-120025-002
SHEET NO.: 1 OF 1

SIZE A

THIS DRAWING CONTAINS INFORMATION THAT IS PROPRIETARY TO MOLEX INCORPORATED AND SHOULD NOT BE USED WITHOUT WRITTEN PERMISSION